YAMAHA

PARTS CATALOGUE

YFM45FXX (3C2A) U.S.A.
YFM45FXX (3C2B) CANADA
YFM45FXX (3C2C) EUROPE

1G3C2-100E1

(2G3C2-100E1)

YAMAHA GENUINE Parts & Accessories

A2

YFM45FXX
PARTS CATALOGUE
©2007 by Yamaha Motor Co., Ltd.
1st edition, August 2007
All rights reserved.
Any reprinting or unauthorized use
without the written permission of
Yamaha Motor Co., Ltd.
is expressly prohibited.

A3

FOREWORD

This Parts Catalogue is related to the parts for the model(s) on the cover page. When you are ordering replacement parts, please refer to this Parts Catalogue and quote both part numbers and part names correctly.

1. Modifications or additions which have been made after the issue of the Parts Catalogue will be announced in the Parts News.
   It is advisable that you make the necessary corrections to the Parts Catalogue according to the Parts News.

2. Abbreviations
   The following abbreviations are used in this Parts Catalogue.

   "UR" Use specified parts number.
   "UN" Use as many as needed.
   "AP" Alternate Parts
   "LM" Locally Made (Parts need to be ordered locally)
   "F#" Frame No. (Applicable machine No.)
   "O/S" Over Size

3. The number of components for assembly
   - Parts, which are to be supplied in an assembly, are listed with a dot (.) in front of the part name as shown below.
   - The numeral appearing to the right of each component part indicates the quantity of parts for each assembly unit.

PART NO.	DESCRIPTION	Q'TY	REMARKS
2F5–83310–60	FRONT FLASHER LIGHT ASSY	2	
115–83311–60	.BULB (6V–18W)	1	

4. Applicable colours of graphics are represented in the "REMARKS" as shown below.

PART NO.	DESCRIPTION	Q'TY	REMARKS
2N4–24110–00–X5	FUEL TANK COMP.	2	MXR
3J1–24240–10	.GRAPHIC, FUEL TANK	1	FOR MXR

5. Note that the illustrations for reference in finding parts numbers are not to be used for assembling. When assembling, please use the applicable service manual.

6. The asterisk (*) before a reference number indicates modified items after the first edition.

7. Applicable Serial No.

Engine Serial No.

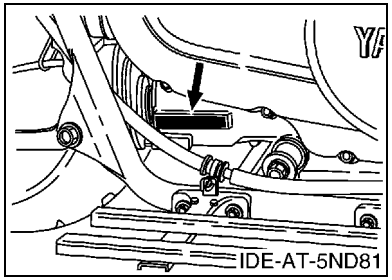

Frame Serial No.

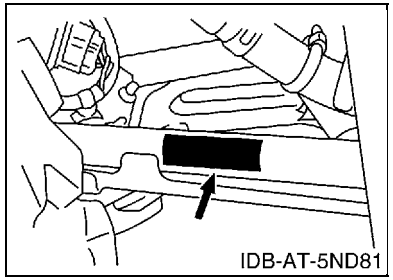

8. Applicable Colour Code (The (*) mark shows Model colour.)

Abbreviation	Colour Name	Colour Code
DPBSE(*)	DEEP PURPLISH BLUE SOLID E	0583
PGD(*)	PASTEL DARK GRAY	003E

9. Quantity Column Information

Column No.	Name Of Q'ty Column	Destination
1	USA	U.S.A.
2	CAN	CANADA
3	EUR	EUROPE

MODEL LABEL

(1) A label called “Model Label” is affixed in the location as indicated in (3) below. When using this parts catalogue, please be sure to cross–reference the “model code – production code No.” in the catalogue with the “model code – production code No.” indicated on the Model Label affixed onto the product concerned.

(2) “Model Label” Indication

a b ○ xxxx – xxx ● x c	a: Model Type Code b: Production Code No. c: Colouring Type

○ 4TW1–010 ● A

(3) Model Label Affixing Location

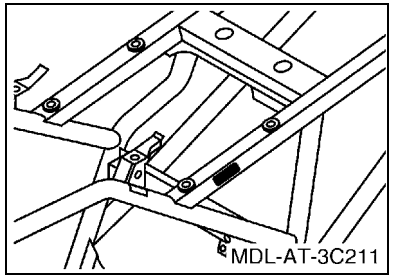

(4) Colouring Information

Model Code	Colouring Type Code	Colour Code	Colour Name	Abbreviation
3C2A	D	0583	DEEP PURPLISH BLUE SOLID E	DPBSE
	L	003E	PASTEL DARK GRAY	PGD
3C2B	D	0583	DEEP PURPLISH BLUE SOLID E	DPBSE
	L	003E	PASTEL DARK GRAY	PGD
3C2C	D	0583	DEEP PURPLISH BLUE SOLID E	DPBSE
	L	003E	PASTEL DARK GRAY	PGD

(5) Model Code – Production Code Number of Model Listed in This Parts Catalogue

Model Code	Production Code No.	Country (destination)	Model Code	Production Code No.	Country (destination)
3C2A	010	U.S.A.			
3C2B	010	CANADA			
3C2C	010	EUROPE			

CONTENTS

ENGINE

CYLINDER HEAD B2
CYLINDER B4
CRANKSHAFT & PISTON B5
VALVE B6
CAMSHAFT & CHAIN B7
WATER PUMP B8
RADIATOR & HOSE B9
OIL PUMP B10
INTAKE B11
CARBURETOR B12
EXHAUST B14
CRANKCASE B15
CRANKCASE COVER 1 ..... C3
STARTER CLUTCH C5
CLUTCH C6
TRANSMISSION C8
MIDDLE DRIVE GEAR C9
SHIFT CAM & FORK C11
SHIFT SHAFT C12

CHASSIS

FRAME C13
FRONT FENDER C15
REAR FENDER D2
SIDE COVER D3
REAR ARM D4
DRIVE SHAFT D5
FRONT DIFFERENTIAL D8
REAR SUSPENSION D10
FRONT SUSPENSION & WHEEL D11
STEERING D12
FUEL TANK D13
SEAT D14
FRONT WHEEL D15
FRONT BRAKE CALIPER E4
REAR WHEEL E5
REAR BRAKE CALIPER E6
STEERING HANDLE & CABLE E7
FRONT MASTER CYLINDER E8
STAND & FOOTREST E9
REAR MASTER CYLINDER E10
GUARD E12
GENERATOR E13
STARTING MOTOR E14
METER E15
HEADLIGHT F2
TAILLIGHT F3
TAILLIGHT 2 ..... F4
HANDLE SWITCH & LEVER F5
ELECTRICAL 1 ..... F6
ELECTRICAL 2 ..... F9
GRAPHICS F10
EMBLEM & LABEL 1 ..... F11
EMBLEM & LABEL 2 ..... F12
EMBLEM & LABEL 3 ..... F13

INDEX

NUMERICAL INDEX M1

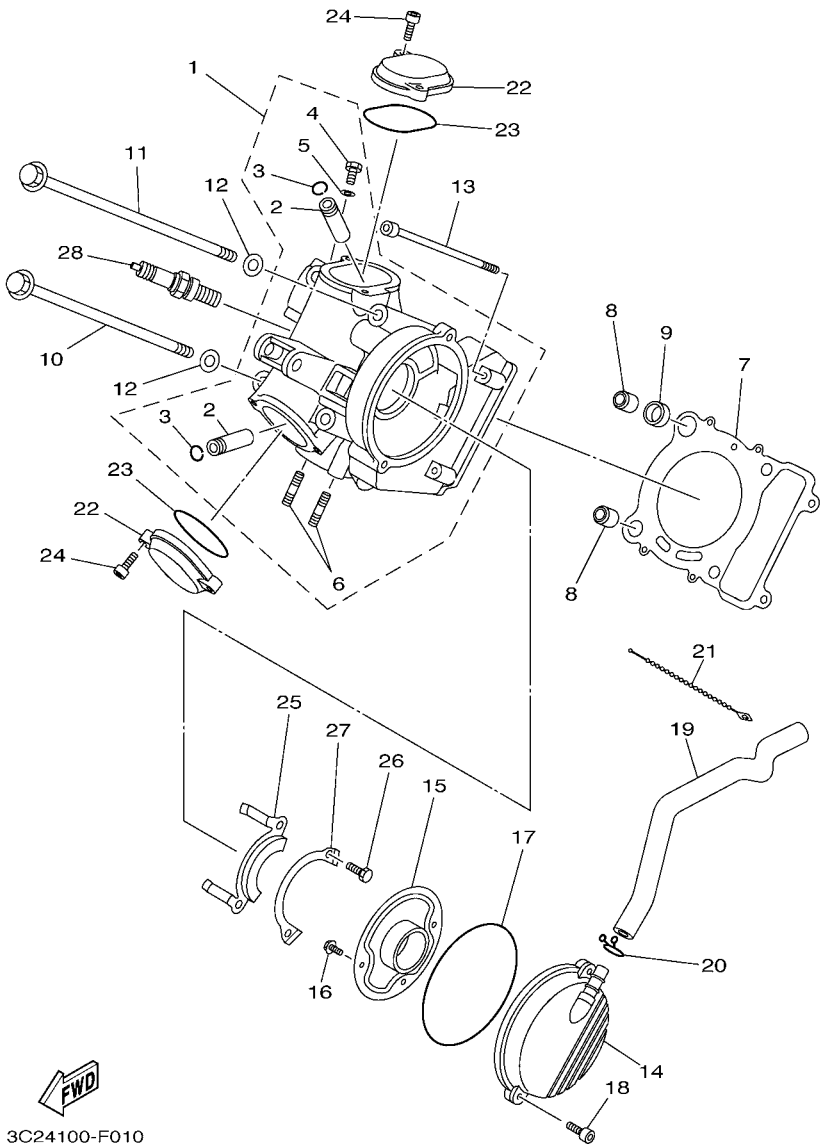

FIG. 1 CYLINDER HEAD

REF. NO.	PART NO.	DESCRIPTION	USA	CAN	EUR			REMARKS
1	5GH–11110–00	CYLINDER HEAD ASSY	1	1	1			
2	3Y1–11133–11	.GUIDE, VALVE 1	2	2	2			
3	93440–12052	.CIRCLIP	2	2	2			
4	90401–06001	.BOLT, UNION	1	1	1			
5	90430–06192	.GASKET	1	1	1			
6	95617–08620	.BOLT, STUD	2	2	2			
7	5GH–11181–00	GASKET, CYLINDER HEAD 1	1	1	1			
8	99530–14016	PIN, DOWEL	2	2	2			
9	90430–14240	GASKET	1	1	1			
10	90105–10137	BOLT, FLANGE	2	2	2			
11	90105–10136	BOLT, FLANGE	2	2	2			
12	90201–10128	WASHER, PLATE	4	4	4			
13	91312–06140	BOLT	2	2	2			
14	4WU–11160–01	BREATHER ASSY	1	1	1			
15	4KB–11165–00	PLATE, BREATHER	1	1	1			
16	95022–06012	BOLT, FLANGE	2	2	2			
17	93211–06635	O-RING	1	1	1			
18	91312–06025	BOLT	2	2	2			
19	3C2–E1166–00	PIPE, BREATHER 1	1	1	1			
20	90467–140A4	CLIP	1	1	1			
21	90464–39800	CLAMP	1	1	1			
22	2NL–11186–12	COVER, CYLINDER HEAD SIDE 2	2	2	2			
23	93210–57634	O-RING	2	2	2			
24	91312–06020	BOLT	4	4	4			
25	5GH–1111F–00	PLATE	1	1	1			
26	97002–06012	BOLT	2	2	2			
27	90215–06003	WASHER, LOCK	1	1	1			

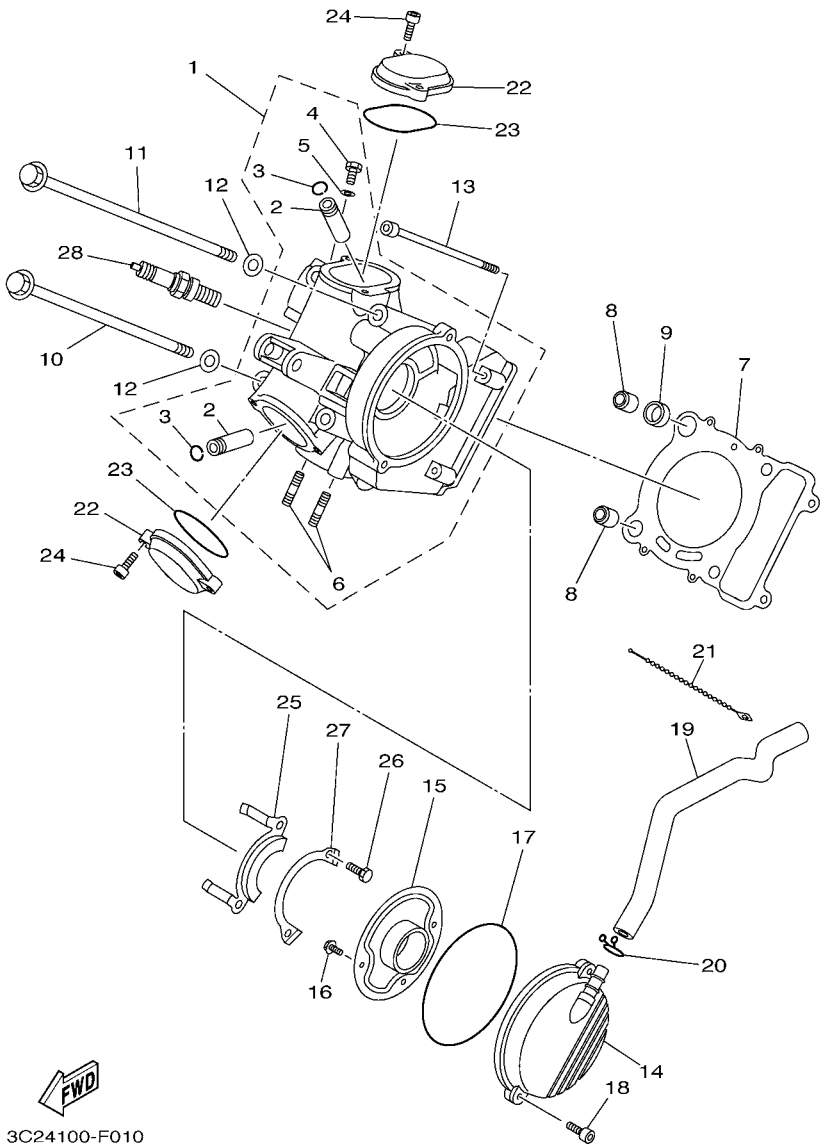

FIG. 1 CYLINDER HEAD

REF. NO.	PART NO.	DESCRIPTION	USA	CAN	EUR			REMARKS
28	94701–00333	PLUG, SPARK (NGK DR8EA)	1	1	1			

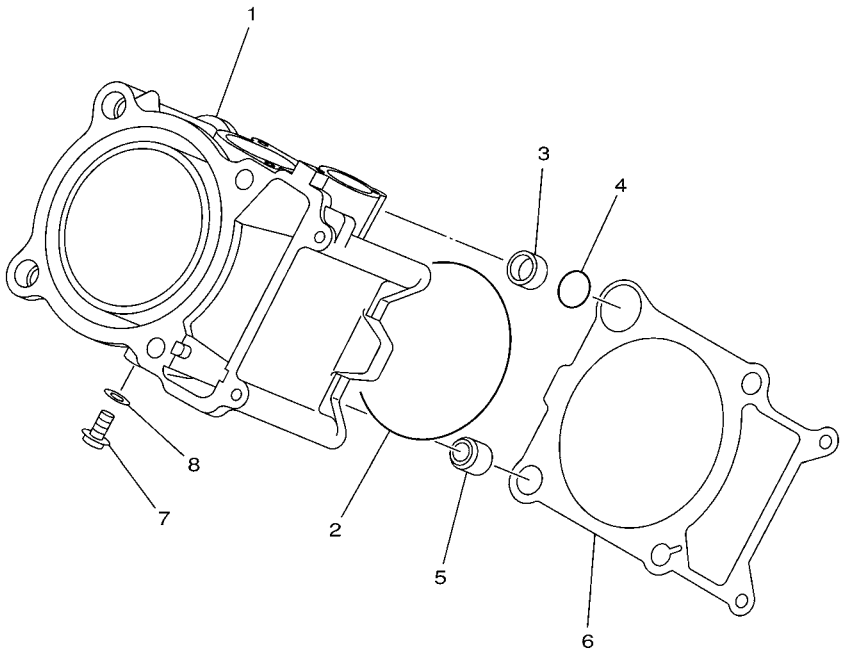

5GH1110-0020

FIG. 2 CYLINDER

REF. NO.	PART NO.	DESCRIPTION	USA	CAN	EUR			REMARKS
1	5ND–11310–00	CYLINDER	1	1	1			
2	93210–89447	O-RING	1	1	1			
3	90387–16547	COLLAR	1	1	1			
4	93210–18322	O-RING	1	1	1			
5	99530–14016	PIN, DOWEL	1	1	1			
6	5GH–11351–00	GASKET, CYLINDER	1	1	1			
7	90153–06002	SCREW, HEXAGON	1	1	1			
8	90430–06014	GASKET	1	1	1			

FIG. 3 CRANKSHAFT & PISTON

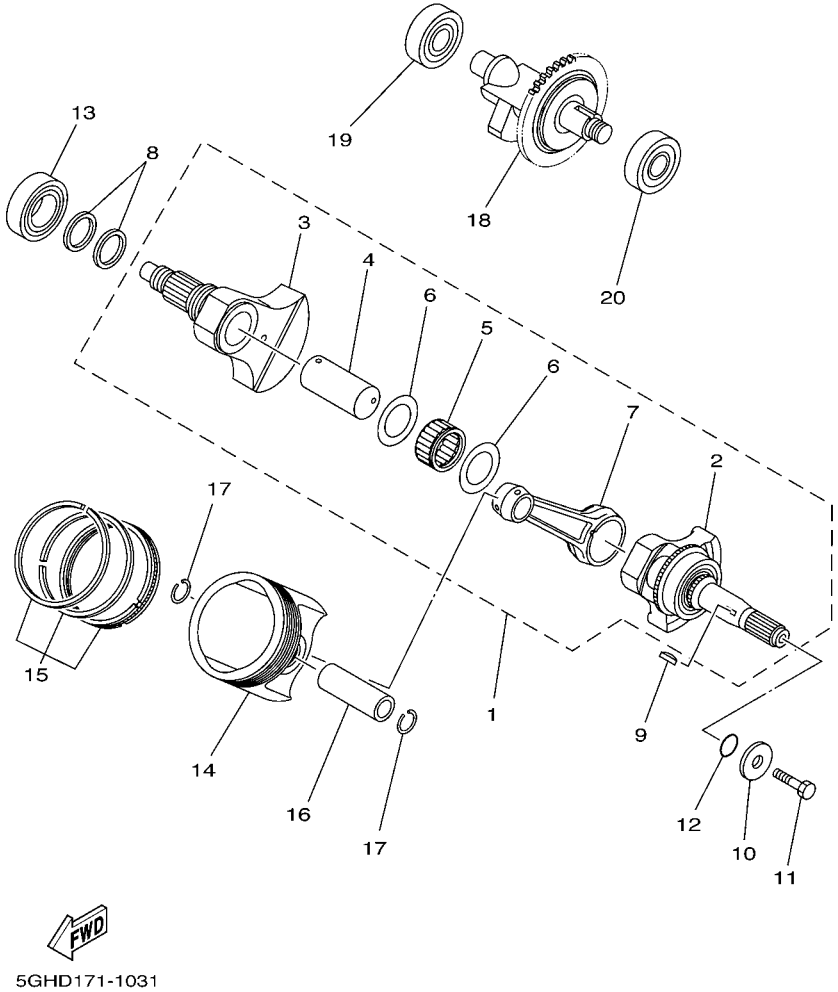

REF. NO.	PART NO.	DESCRIPTION	USA	CAN	EUR			REMARKS
1	5ND–11400–00	CRANKSHAFT ASSY	1	1	1			
2	5ND–W1141–00	.CRANK SUB ASSY 1	1	1	1			
3	5ND–W1142–00	.CRANK SUB ASSY 2	1	1	1			
4	5GH–11681–00	.PIN, CRANK 1	1	1	1			
5	93310–635D4	.BEARING	1	1	1			
6	90201–356K1	.WASHER, PLATE	2	2	2			
7	5GH–11651–01	.ROD, CONNECTING	1	1	1			
8	5GH–11447–00	SEAL, CRANK	2	2	2			
9	90280–05048	KEY, WOODRUFF	1	1	1			
10	90201–10038	WASHER, PLATE	1	1	1			
11	90101–10017	BOLT	1	1	1			
12	93210–16290	O-RING	1	1	1			
13	93306–30629	BEARING	1	1	1			
14	5ND–11631–00	PISTON (STD)	1	1	1			
	5ND–11636–00	PISTON (0.50MM O/S)	1	1	1			AP
	5ND–11638–00	PISTON (1.00MM O/S)	1	1	1			AP
15	5ND–11603–00	PISTON RING SET (STD)	1	1	1			
	5ND–11605–00	PISTON RING SET (0.50MM O/S)	1	1	1			AP
	5ND–11607–00	PISTON RING SET (1.00MM O/S)	1	1	1			AP
16	3LD–11633–00	PIN, PISTON	1	1	1			
17	93450–22027	CIRCLIP	2	2	2			
18	5ND–11500–00	BALANCER ASSY	1	1	1			
19	93306–30315	BEARING	1	1	1			
20	93306–30438	BEARING	1	1	1			

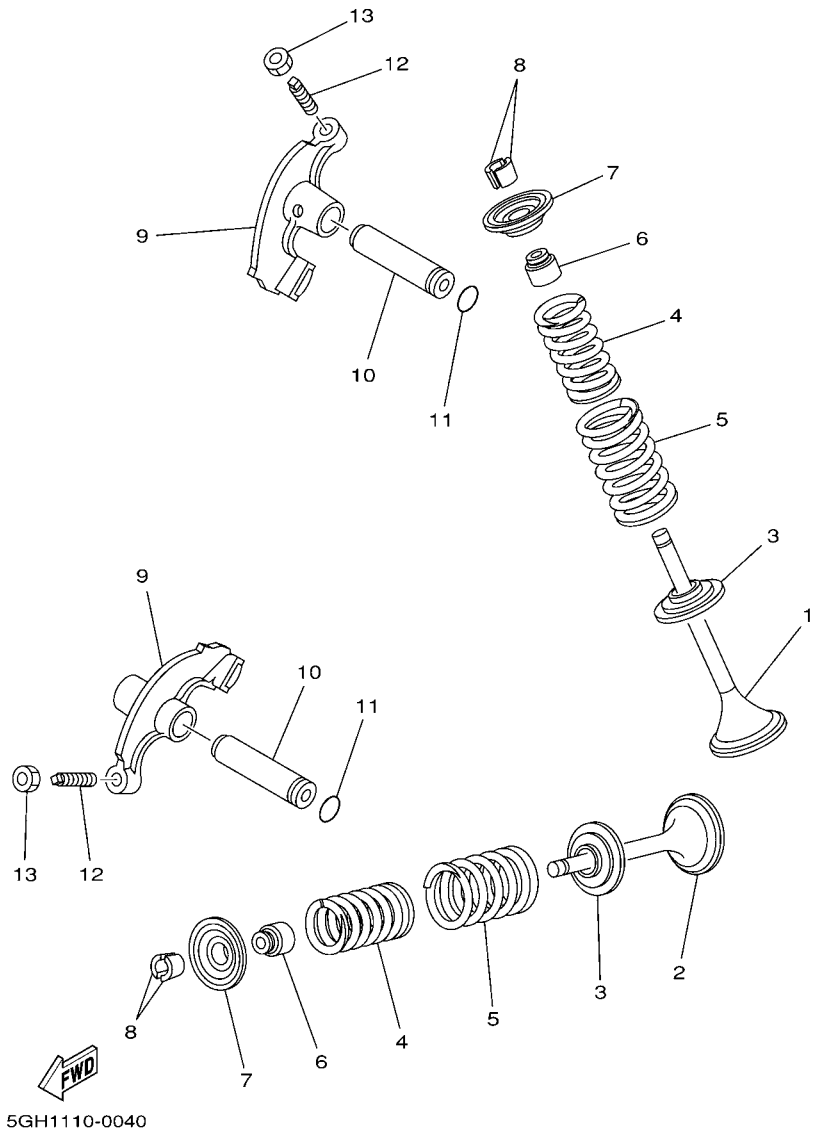

FIG. 4 VALVE

REF. NO.	PART NO.	DESCRIPTION	USA	CAN	EUR			REMARKS
1	5GH–12111–00	VALVE, INTAKE	1	1	1			
2	5GH–12121–00	VALVE, EXHAUST	1	1	1			
3	3Y1–12116–00	SEAT, VALVE SPRING	2	2	2			
4	22U–12113–00	SPRING, VALVE INNER	2	2	2			
5	1UY–12114–01	SPRING, VALVE OUTER	2	2	2			
6	M01–12129–00	SEAL, VALVE STEM	2	2	2			
7	3Y1–12117–01	RETAINER, VALVE SPRING	2	2	2			
8	1J7–12118–00	COTTER, VALVE	4	4	4			
9	3GD–12151–00	ARM, VALVE ROCKER	2	2	2			
10	3Y1–12156–00	SHAFT, ROCKER 2	2	2	2			
11	93210–09165	O-RING	2	2	2			
12	31G–12159–02	SCREW, VALVE ADJUSTING	2	2	2			
13	31G–12158–00	NUT, LOCK	2	2	2			

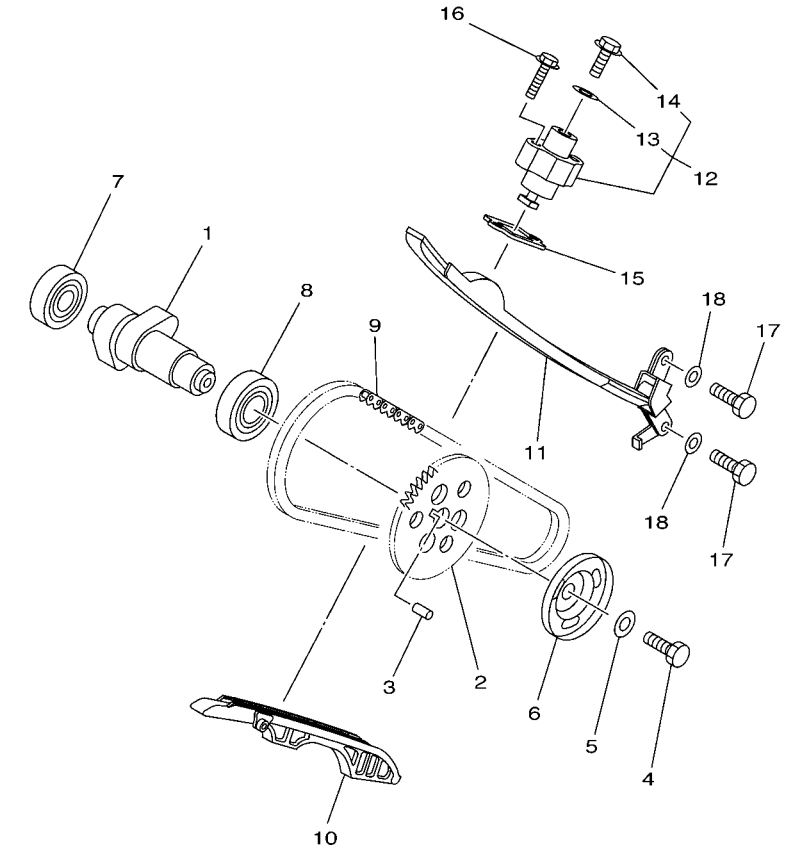

5GHK110-2050

FIG. 5 CAMSHAFT & CHAIN

REF. NO.	PART NO.	DESCRIPTION	USA	CAN	EUR			REMARKS
1	5GH–12171–00	CAMSHAFT 1	1	1	1			
2	5GH–12176–10	SPROCKET, CAM CHAIN	1	1	1			
3	93604–10011	PIN, DOWEL	1	1	1			
4	90101–10016	BOLT	1	1	1			
5	90201–10591	WASHER, PLATE	1	1	1			
6	4KB–11145–00	PLATE, BREATHER 2	1	1	1			
7	93306–00438	BEARING	1	1	1			NIHONSEIKO
8	93306–00515	BEARING	1	1	1			
9	94582–20116	CHAIN (DID SCR-0409 SV 116LE)	1	1	1			
10	5GH–12231–10	GUIDE, STOPPER 1	1	1	1			
11	5GH–12241–00	GUIDE, STOPPER 2	1	1	1			
12	31G–12210–01	TENSIONER ASSY, CAM CHAIN	1	1	1			
13	31G–12214–00	.GASKET	1	1	1			
14	31G–12222–00	.PLUG	1	1	1			
15	3GD–12213–00	GASKET, TENSIONER CASE	1	1	1			
16	95022–06025	BOLT, FLANGE	2	2	2			
17	97022–06016	BOLT	2	2	2			
18	92902–06600	WASHER, PLATE	2	2	2			

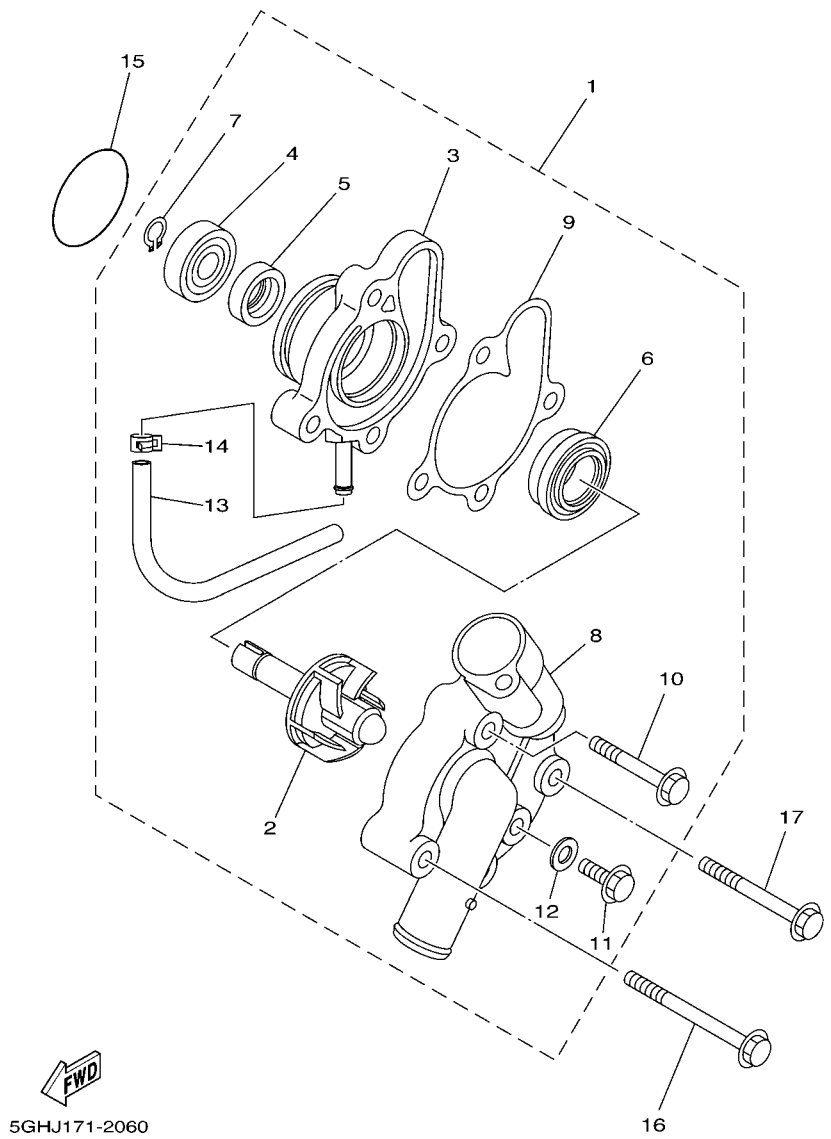

FIG. 6 WATER PUMP

REF. NO.	PART NO.	DESCRIPTION	USA	CAN	EUR			REMARKS
1	5GH–12420–01	WATER PUMP ASSY	1	1	1			
2	5CG–12450–00	.IMPELLER SHAFT ASSY	1	1	1			
3	5GH–12421–01	.HOUSING, WATER PUMP	1	1	1			
4	93306–00006	.BEARING	1	1	1			
5	93101–10090	.OIL SEAL	1	1	1			
6	11H–12438–10	.SEAL, MECHANICAL	1	1	1			
7	99009–10400	.CIRCLIP	1	1	1			
8	5GH–12422–00	.COVER, HOUSING	1	1	1			
9	5GH–12428–00	.GASKET, HOUSING COVER 2	1	1	1			
10	90105–06086	.BOLT, FLANGE	2	2	2			
11	95022–06012	.BOLT, FLANGE	1	1	1			
12	90430–06014	.GASKET	1	1	1			
13	90446–06001	.HOSE (L300)	1	1	1			
14	90467–06194	.CLIP	1	1	1			
15	93210–33133	O-RING	1	1	1			
16	95022–06060	BOLT, FLANGE	1	1	1			
17	95022–06050	BOLT, FLANGE	1	1	1			

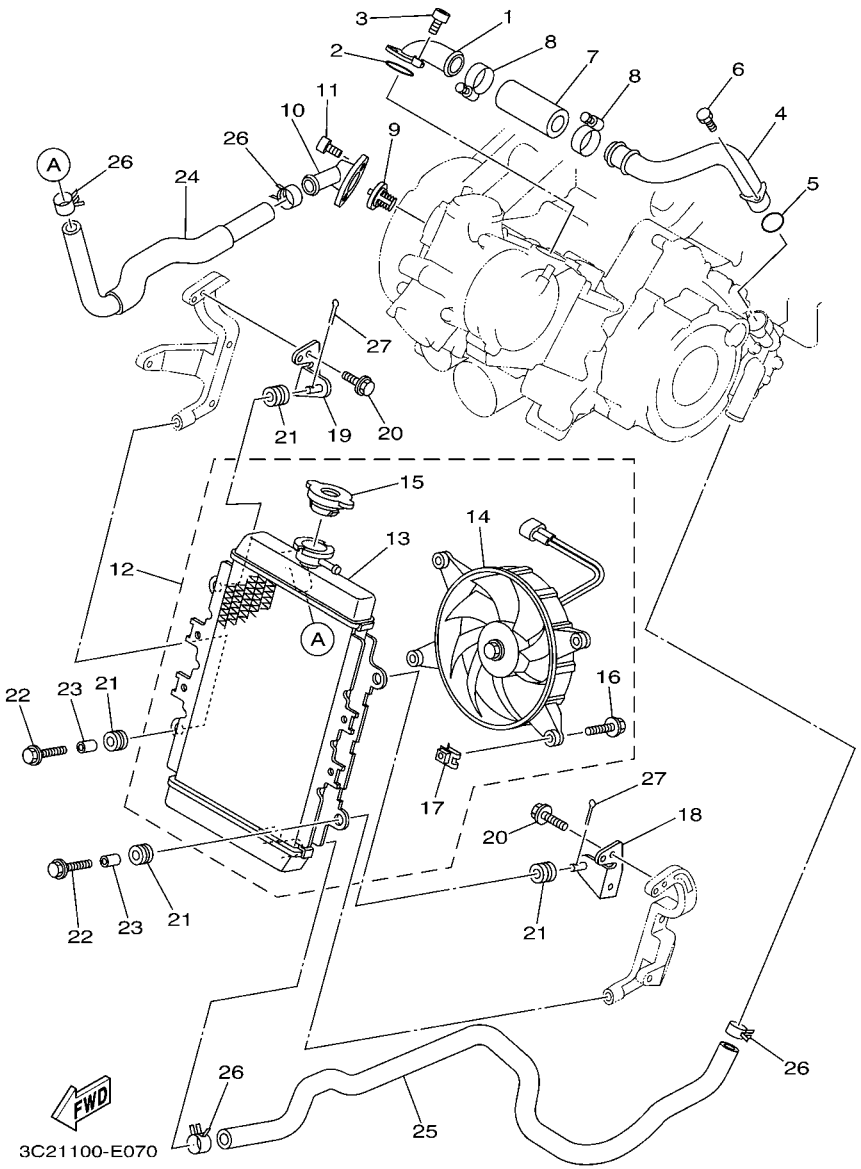

FIG. 7 RADIATOR & HOSE

REF. NO.	PART NO.	DESCRIPTION	USA	CAN	EUR			REMARKS
1	5GH–12446–00	JOINT	1	1	1			
2	93210–33786	O-RING	1	1	1			
3	90110–06189	BOLT, HEXAGON SOCKET HEAD	2	2	2			
4	5GH–12484–00	PIPE 4	1	1	1			
5	93210–18417	O-RING	1	1	1			
6	91312–06012	BOLT	1	1	1			
7	5GH–12481–00	PIPE 1	1	1	1			
8	90450–32015	HOSE CLAMP ASSY	2	2	2			
9	2TV–12411–00	THERMOSTAT	1	1	1			
10	5GH–12413–00	COVER, THERMOSTAT	1	1	1			
11	91312–06020	BOLT	2	2	2			
12	3C2–E2460–00	RADIATOR ASSY	1	1	1			
13	3C2–E2461–00	.RADIATOR ASSY	1	1	1			
14	5ND–E2405–01	.BLOWER ASSY	1	1	1			
15	5ND–E2462–00	.CAP, RADIATOR	1	1	1			
16	5ND–E2675–00	.BOLT, BLOWER HOLDING	4	4	4			
17	5ND–E2535–00	.PLATE	4	4	4			
18	3C2–F142M–00	BRACKET, RADIATOR 3	1	1	1			
19	3C2–F142N–00	BRACKET, RADIATOR	1	1	1			
20	95812–06014	BOLT, FLANGE	2	2	2			
21	90480–15235	GROMMET	4	4	4			
22	95802–06025	BOLT, FLANGE	2	2	2			
23	90387–072Y2	COLLAR	2	2	2			
24	3C2–E2482–00	PIPE 2	1	1	1			
25	3C2–E2483–00	PIPE 3	1	1	1			
26	90467–26800	CLIP	4	4	4			
27	90468–18121	CLIP	2	2	2			

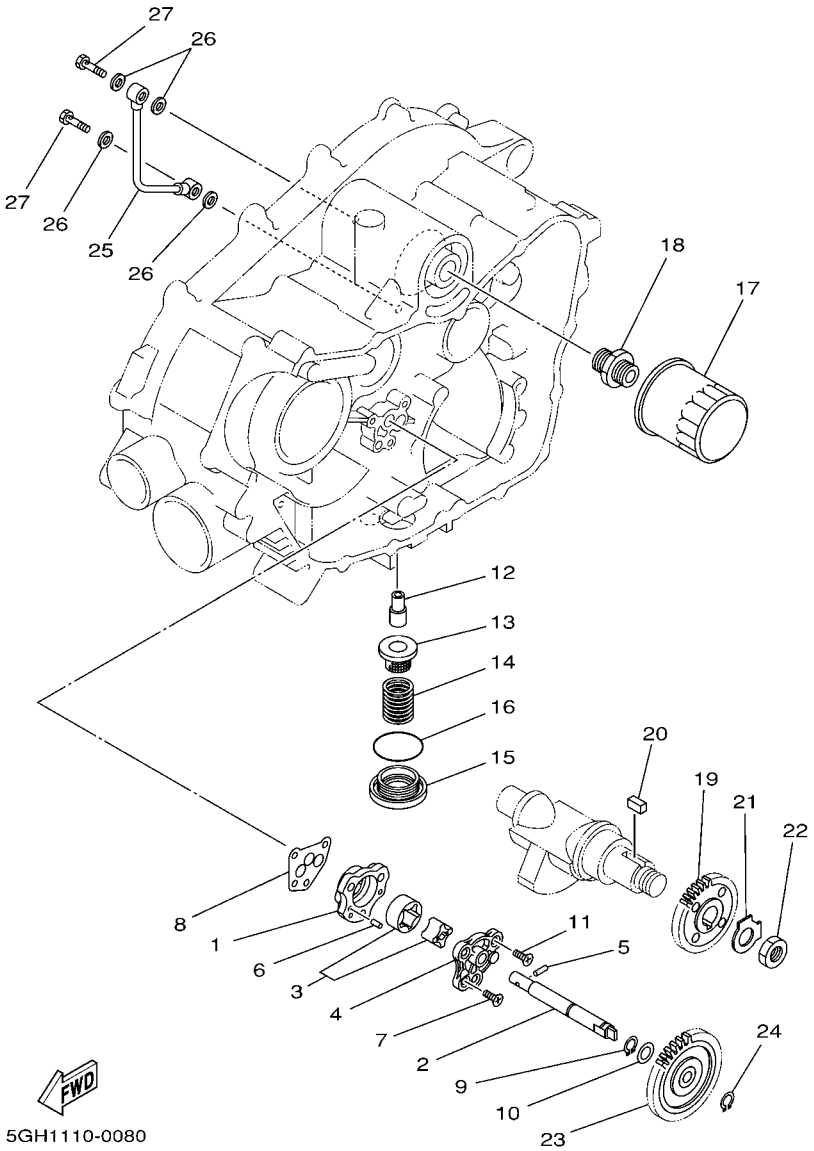

FIG. 8 OIL PUMP

REF. NO.	PART NO.	DESCRIPTION	USA	CAN	EUR			REMARKS
1	1UY–13336–00	HOUSING, ROTOR	1	1	1			
2	5GH–13314–00	SHAFT, PUMP	1	1	1			
3	3Y1–13310–01	ROTOR ASSY 1	1	1	1			
4	1UY–13316–00	COVER, PUMP	1	1	1			
5	93603–12030	PIN, DOWEL	1	1	1			
6	93603–07073	PIN, DOWEL	2	2	2			
7	98702–06020	SCREW, FLAT HEAD	1	1	1			
8	3GD–13329–00	GASKET, PUMP COVER	1	1	1			
9	99009–11400	CIRCLIP	1	1	1			
10	90201–114P2	WASHER, PLATE (1.0)	1	1	1			
11	98702–06030	SCREW, FLAT HEAD	3	3	3			
12	2XK–13416–00	PIPE, OIL 1	1	1	1			
13	51Y–13411–00	STRAINER, OIL	1	1	1			
14	90501–18576	SPRING, COMPRESSION	1	1	1			
15	4HC–15351–00	PLUG, DRAIN	1	1	1			
16	93210–35520	O-RING	1	1	1			
17	5GH–13440–20	ELEMENT ASSY, OIL CLEANER	1	1	1			
18	90401–20145	BOLT, UNION	1	1	1			
19	5GH–13324–00	GEAR, PUMP DRIVE	1	1	1			
20	90282–05013	KEY, STRAIGHT	1	1	1			
21	90215–14205	WASHER, LOCK	1	1	1			
22	90170–14284	NUT	1	1	1			
23	5GH–13325–00	GEAR, PUMP DRIVEN	1	1	1			
24	99009–11400	CIRCLIP	1	1	1			
25	4KB–13161–01	PIPE, DELIVERY 1	1	1	1			
26	90430–08119	GASKET	4	4	4			
27	90401–08006	BOLT, UNION	2	2	2			

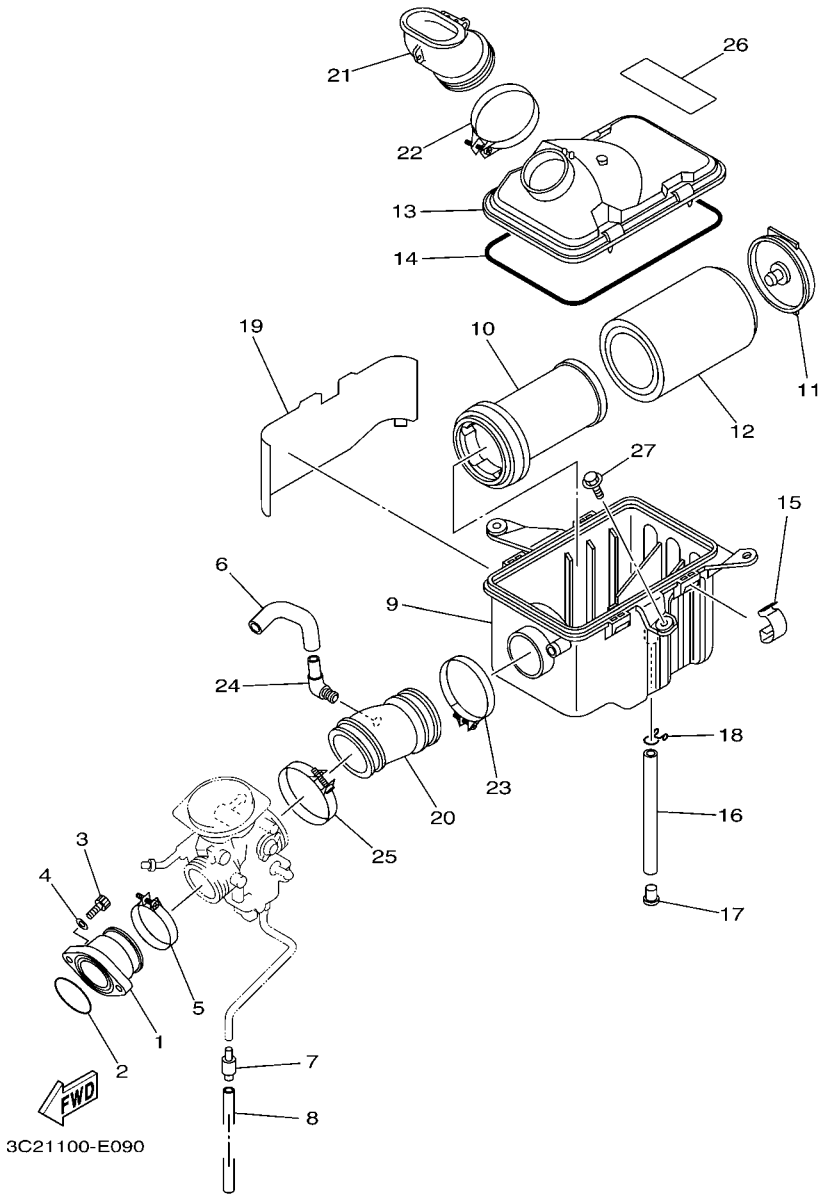

FIG. 9 INTAKE

REF. NO.	PART NO.	DESCRIPTION	USA	CAN	EUR			REMARKS
1	5GH–13586–00	JOINT, CARBURETOR 1	1	1	1			
2	93210–44545	O-RING	1	1	1			
3	91312–08025	BOLT	2	2	2			
4	90201–08070	WASHER, PLATE	2	2	2			
5	90450–47002	HOSE CLAMP ASSY	1	1	1			
6	5ND–E4349–00	PIPE	1	1	1			
7	24W–14193–00	PIPE	1	1	1			
8	91A20–07010	TUBE, FLEXIBLE VINYL	1	1	1			
9	5UH–E4411–00	CASE, AIR CLEANER 1	1	1	1			
10	5UH–E4458–00	GUIDE	1	1	1			
11	5UH–E4468–00	PLATE,ELEMENT FITTING	1	1	1			
12	5UH–E4451–10	ELEMENT, AIR CLEANER	1	1	1			
13	5UH–E4412–00	CAP, CLEANER CASE 1	1	1	1			
14	5UH–E4462–00	SEAL	1	1	1			
15	5UH–E4424–00	CLIP, CAP FITTING	4	4	4			
16	5UH–E4769–10	PIPE, DRAIN	1	1	1			
17	5UH–E4191–00	PLUG, DRAIN	1	1	1			
18	5UH–E4438–00	CLIP, DRAIN CLEANER	1	1	1			
19	5ND–E442F–00	PROTECTOR	1	1	1			
20	5ND–E4453–00	JOINT, AIR CLEANER 1	1	1	1			
21	5ND–E4437–02	DUCT	1	1	1			
22	90450–58002	HOSE CLAMP ASSY	1	1	1			
23	90450–58002	HOSE CLAMP ASSY	1	1	1			
24	31A–14419–00	PIPE	1	1	1			
25	90450–56008	HOSE CLAMP ASSY	1	1	1			
26	1D9–2177C–20	PLATE, EPA OFFROAD ATV 1	1					
27	90119–06227	BOLT, WITH WASHER	2	2	2			

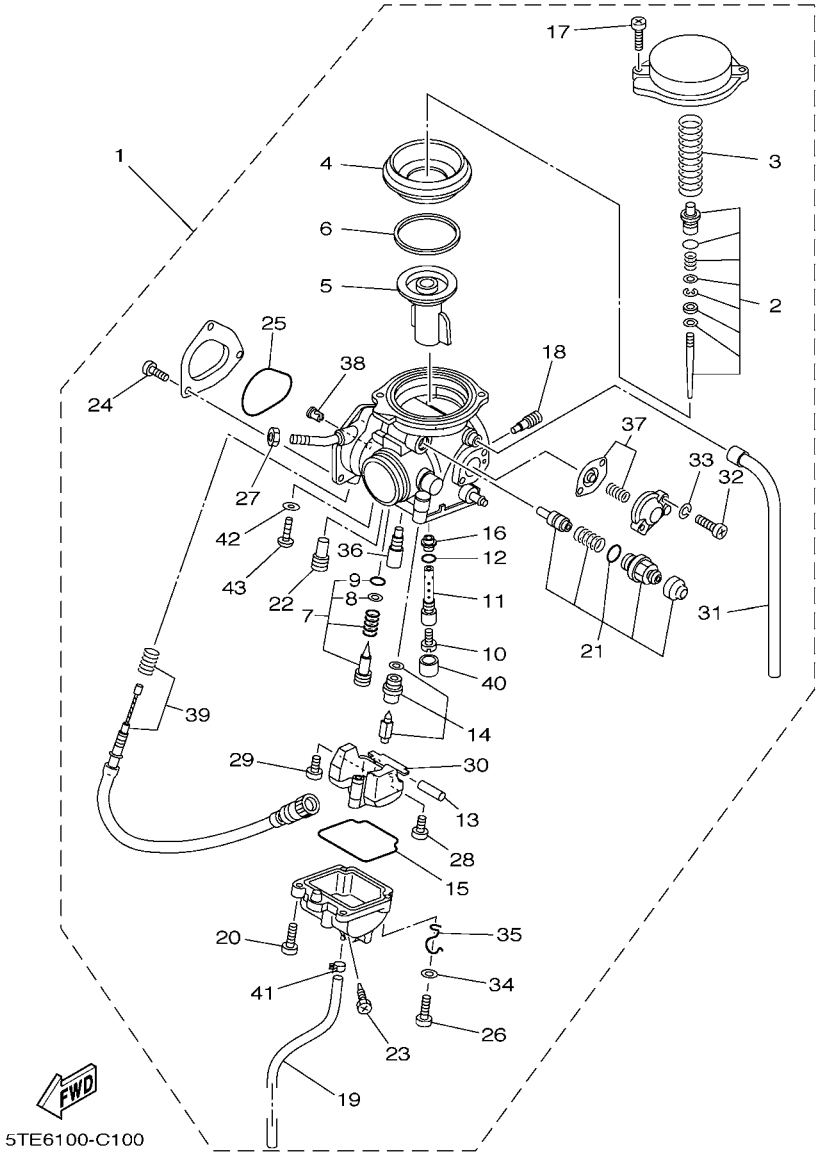

FIG. 10 CARBURETOR

REF. NO.	PART NO.	DESCRIPTION	USA	CAN	EUR			REMARKS
1	5ND–E4101–11	CARBURETOR ASSY 1	1	1				
	5ND–E4101–01	CARBURETOR ASSY 1			1			
2	5ND–1490J–10	.NEEDLE SET	1	1				
	5ND–1490J–00	.NEEDLE SET			1			
3	5DM–14933–00	.SPRING, DIAPHRAGM	1	1	1			
4	5GH–14940–10	.DIAPHRAGM ASSY	1	1	1			
5	5DM–14112–00	.VALVE, THROTTLE 1	1	1	1			
6	5GH–14918–10	.RING	1	1	1			
7	5ND–14105–00	.PILOT SCREW SET	1	1				
	5GH–14105–10	.PILOT SCREW SET			1			WHITE SPRING
8	3H1–14962–00	..WASHER	1	1	1			
9	3H1–14147–00	..O-RING	1	1	1			
10	3G2–1423E–52	.JET, MAIN (#131.3)	1	1	1			
11	5GH–14261–00	.HOLDER	1	1	1			
12	583–14561–00	.O-RING	1	1	1			
13	127–14186–00	.PIN, FLOAT	1	1	1			
14	5UH–14107–20	.NEEDLE VALVE SET	1	1	1			
15	5DM–14561–00	.O-RING	1	1	1			
16	5DM–14141–40	.NOZZLE, MAIN	1	1	1			
17	4KM–14216–00	.SCREW	2	2	2			
18	1HX–14231–16	.JET, MAIN (# 80)	1	1	1			
19	4KB–14193–20	.PIPE	1	1	1			
20	98580–04010	.SCREW, PAN HEAD	3	3	3			
21	5ND–1410A–00	.STARTER SET	1	1				
	5GH–1410A–00	.STARTER SET			1			
22	3G2–14231–14	.JET,PILOT AIR(#70)	1	1	1			
23	3FV–14191–00	.PLUG, DRAIN	1	1	1			

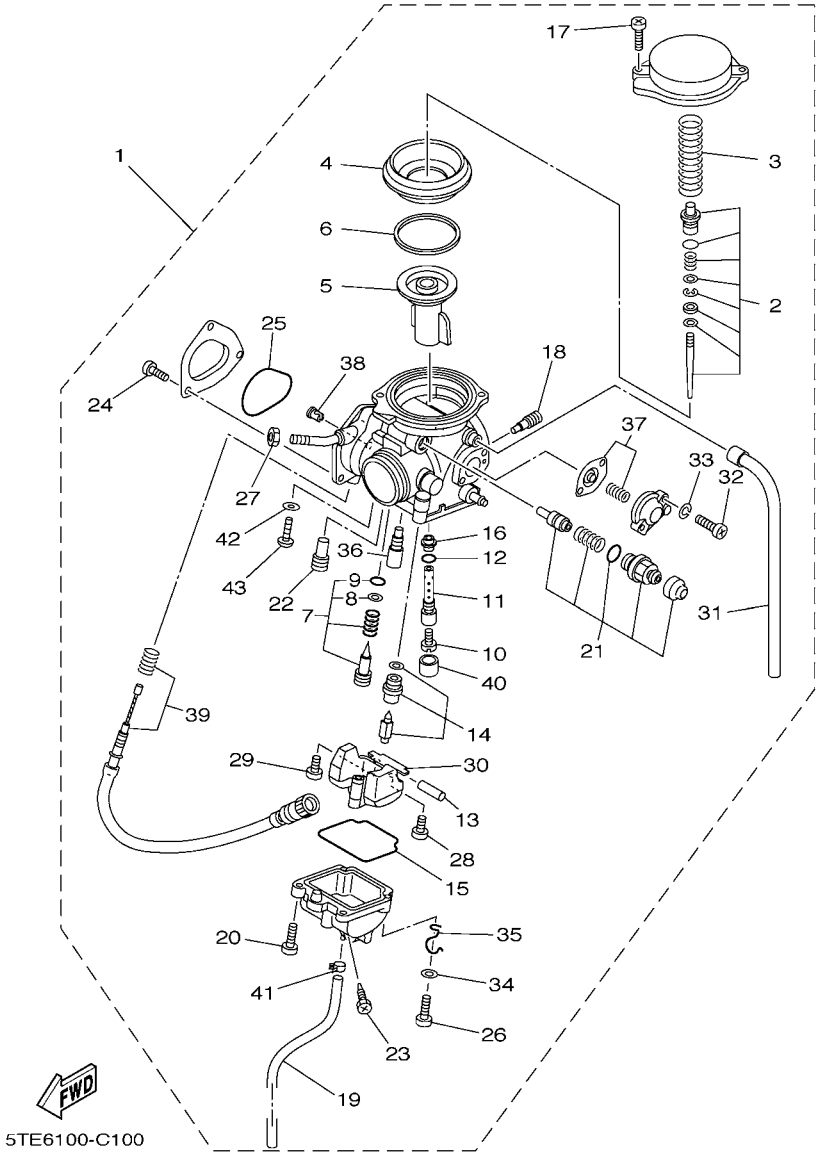

FIG. 10 CARBURETOR

REF. NO.	PART NO.	DESCRIPTION	USA	CAN	EUR			REMARKS
24	9850L–04006	.SCREW, PAN HEAD	3	3	3			
25	5FU–E4147–00	.O-RING	1	1	1			
26	98507–04014	.SCREW, PAN HEAD	1	1	1			
27	522–14161–00	.NUT, CABLE ADJUSTING	1	1	1			
28	98507–04008	.SCREW, PAN HEAD	1	1	1			
29	1FN–14565–00	.SCREW	1	1	1			
30	5DM–14985–00	.FLOAT	1	1	1			
31	5GH–14197–00	.PIPE	1	1	1			
32	98501–04014	.SCREW, PAN HEAD	2	2	2			
33	92902–04100	.WASHER, SPRING	2	2	2			
34	92907–04600	.WASHER	1	1	1			
35	5GH–14937–00	.CLIP	1	1	1			
36	4KM–14142–17	.JET, PILOT (# 17.5)	1	1	1			
37	5ND–1490H–00	.DIAPHRAGM SET 5	1	1	1			
38	5FU–E4155–00	.GUIDE, CABLE	1	1	1			
39	5GH–14103–01	.THROTTLE SCREW SET	1	1	1			
40	5GH–14918–00	.RING	1	1	1			
41	4XE–14937–00	.CLIP	1	1	1			
42	256–14956–01	.WASHER	1	1	1			
43	3DM–14216–00	.SCREW	1	1	1			

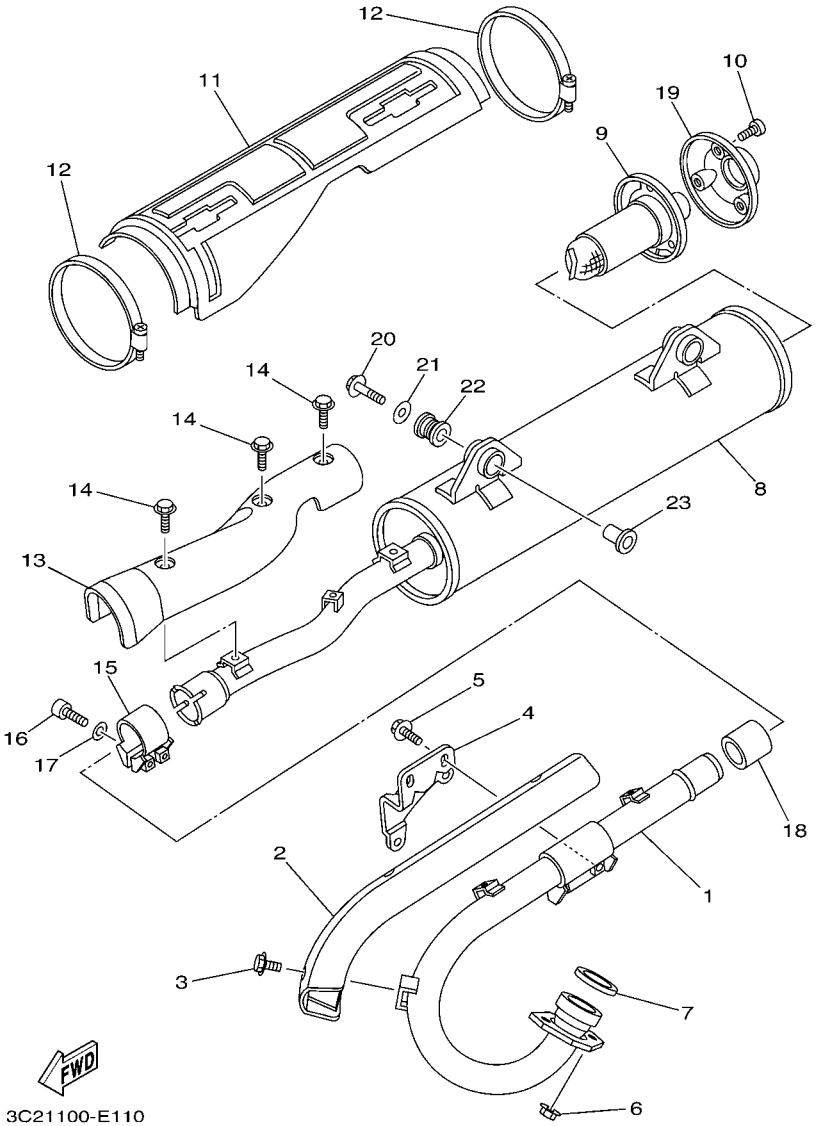

FIG. 11 EXHAUST

REF. NO.	PART NO.	DESCRIPTION	USA	CAN	EUR			REMARKS
1	5ND–E4611–00	PIPE, EXHAUST 1	1	1	1			
2	5ND–E4628–00	PROTECTOR, EXHAUST PIPE	1	1	1			
3	9581P–06008	BOLT, FLANGE	3	3	3			
4	5ND–E477K–02	PLATE 1	1	1	1			
5	95812–06016	BOLT, FLANGE	2	2	2			
6	90179–08410	NUT	2	2	2			
7	3GD–14613–00	GASKET, EXHAUST PIPE	1	1	1			
8	5ND–E4711–00	MUFFLER 1	1	1	1			
9	3C2–E4752–00	PIPE, OUTLET	1	1	1			
10	5ND–E4719–00	BOLT, MUFFLER	3	3	3			
11	5ND–E4718–00	PROTECTOR, MUFFLER 1	1	1	1			
12	5ND–E4788–00	BAND, SILENCER	2	2	2			
13	5ND–E4728–00	PROTECTOR, MUFFLER 2	1	1	1			
14	9581P–06008	BOLT, FLANGE	3	3	3			
15	5ND–E4715–00	BAND, MUFFLER	1	1	1			
16	5ND–E4777–00	BOLT	2	2	2			
17	5ND–E4759–00	WASHER	2	2	2			
18	5ND–E4714–00	GASKET, MUFFLER	1	1	1			
19	3C2–E4787–00	CAP, SILENCER	1	1	1			
20	95822–10040	BOLT, FLANGE	2	2	2			
21	90201–10056	WASHER, PLATE	2	2	2			
22	5ND–E4737–00	DAMPER, MUFFLER	2	2	2			
23	90387–10636	COLLAR	2	2	2			

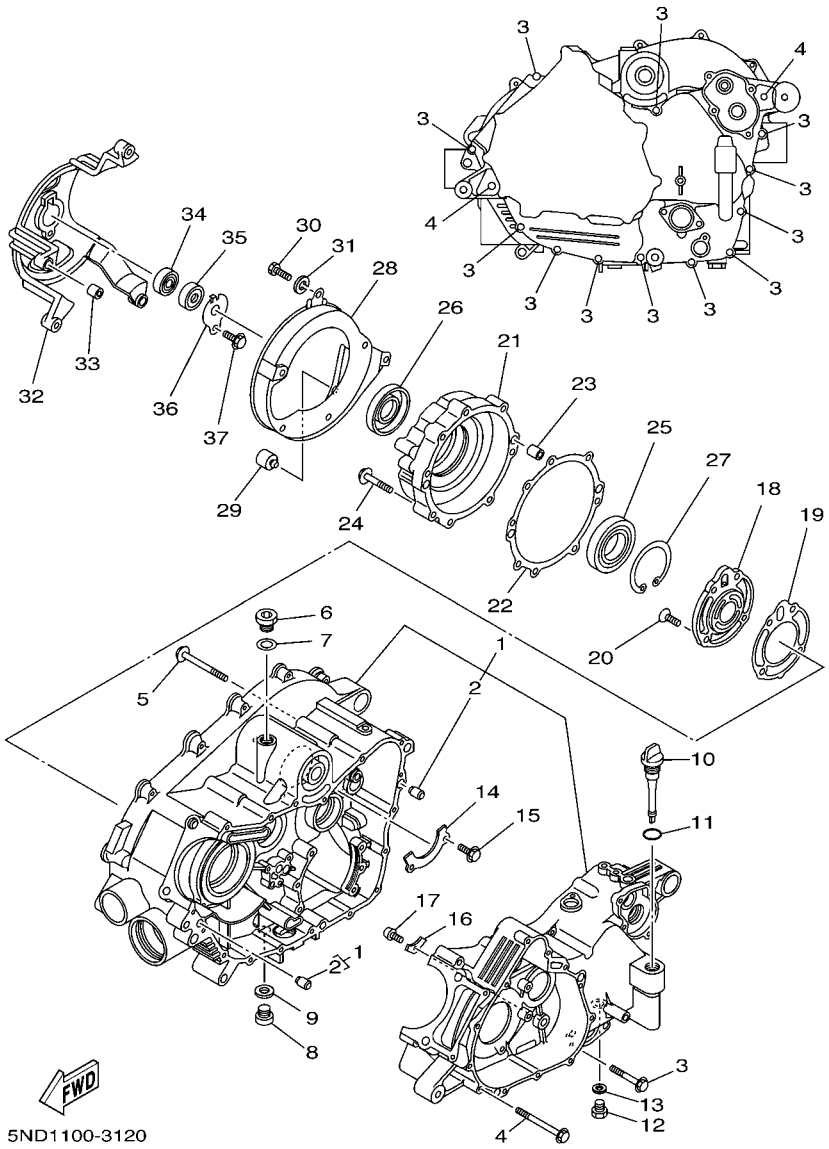

FIG. 12 CRANKCASE

REF. NO.	PART NO.	DESCRIPTION	USA	CAN	EUR			REMARKS
1	3C2–15100–02	CRANKCASE ASSY	1	1	1			
2	99530–10114	.PIN, DOWEL	2	2	2			
3	95022–06040	BOLT, FLANGE	12	12	12			
4	95022–06065	BOLT, FLANGE	2	2	2			
5	95022–06065	BOLT, FLANGE	3	3	3			
6	90340–18003	PLUG, STRAIGHT SCREW	1	1	1			
7	90430–18130	GASKET	1	1	1			
8	90340–14002	PLUG, STRAIGHT SCREW	1	1	1			
9	214–11198–01	GASKET	1	1	1			
10	5GH–15362–00	PLUG, OIL LEVEL	1	1	1			
11	93210–19026	O-RING	1	1	1			
12	90340–14029	PLUG, STRAIGHT SCREW	1	1	1			
13	214–11198–01	GASKET	1	1	1			
14	5GH–15388–00	PLATE, BEARING COVER	1	1	1			
15	95822–06012	BOLT, FLANGE	2	2	2			
16	2K7–15383–00	PLATE, BEARING COVER	1	1	1			
17	90151–06023	SCREW, COUNTERSUNK	1	1	1			
18	5GH–15414–00	COVER, AIR CLEANER	1	1	1			
19	5GH–15454–00	GASKET 1	1	1	1			
20	98702–06020	SCREW, FLAT HEAD	4	4	4			
21	5GH–15163–00	HOUSING, BEARING 1	1	1	1			
22	5GH–15463–00	GASKET, COVER PINION 2	1	1	1			
23	99530–10114	PIN, DOWEL	2	2	2			
24	95022–06040	BOLT, FLANGE	8	8	8			
25	93316–01003	BEARING	1	1	1			
26	93102–32483	OIL SEAL	1	1	1			
27	99009–80500	CIRCLIP	1	1	1			

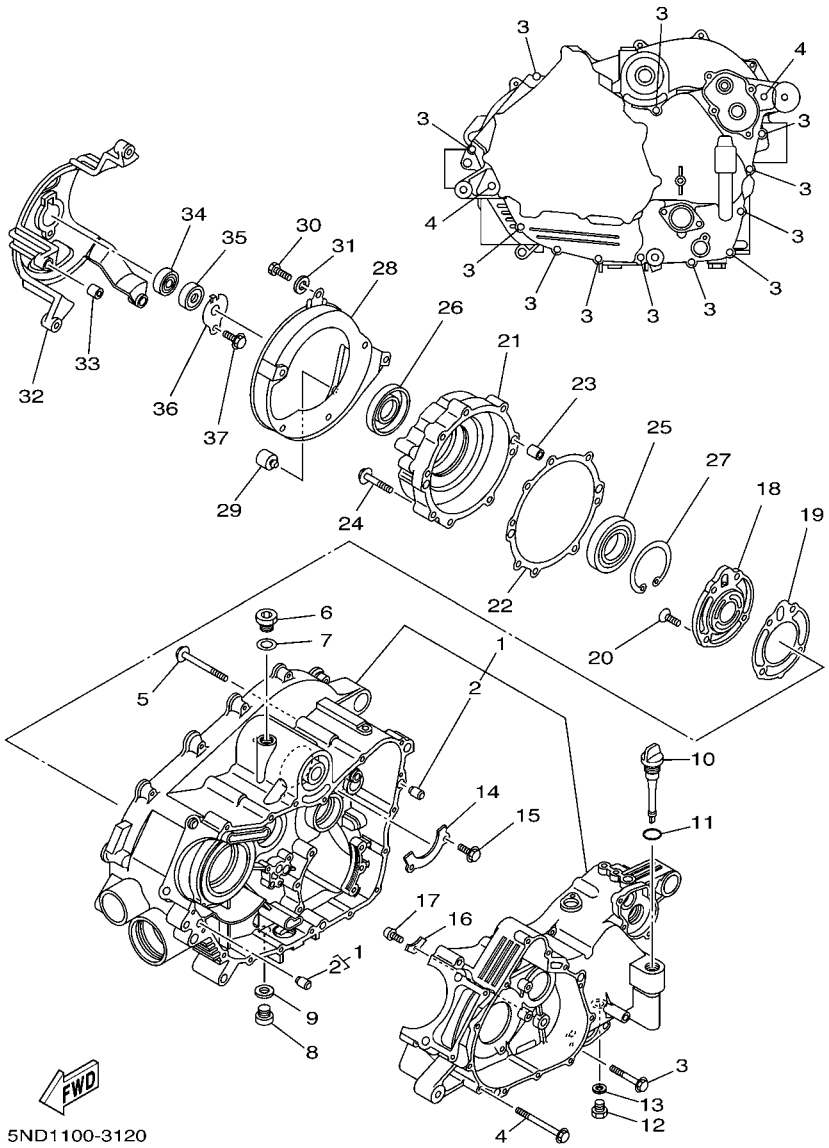

FIG. 12 CRANKCASE

REF. NO.	PART NO.	DESCRIPTION	USA	CAN	EUR			REMARKS
28	5GH–15333–00	COVER	1	1	1			
29	5GH–15338–00	DAMPER, ENGINE MOUNT 5	1	1	1			
30	97012–06016	BOLT	6	6	6			
31	92902–06600	WASHER, PLATE	6	6	6			
32	5GH–15442–01	HOUSING, BEARING	1	1	1			
33	91810–20001	PIN, DOWEL	2	2	2			
34	93306–20120	BEARING	1	1	1			
35	93101–12168	OIL SEAL	1	1	1			
36	4WV–15381–00	PLATE, BEARING COVER	1	1	1			
37	95022–06012	BOLT, FLANGE	1	1	1			

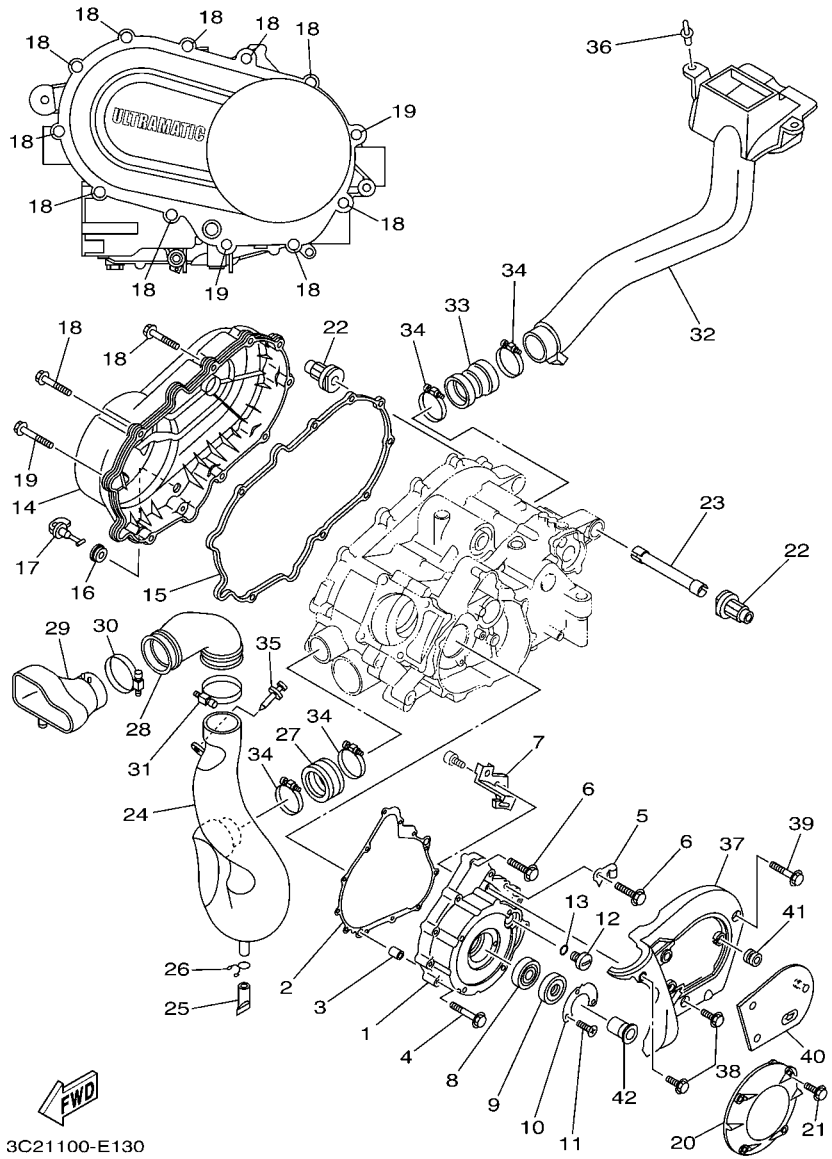

FIG. 13 CRANKCASE COVER 1

REF. NO.	PART NO.	DESCRIPTION	USA	CAN	EUR			REMARKS
1	5GH–15411–01	COVER, CRANKCASE 1	1	1	1			
2	5GH–15451–00	GASKET, CRANKCASE COVER 1	1	1	1			
3	99530–10114	PIN, DOWEL	2	2	2			
4	95022–06040	BOLT, FLANGE	8	8	8			
5	90465–08127	CLAMP	1	1	1			
6	95022–06030	BOLT, FLANGE	4	4	4			
7	5GH–15113–00	PLATE	1	1	1			
8	93306–07801	BEARING	1	1	1			
9	93102–28476	OIL SEAL	1	1	1			
10	21V–15719–00	WASHER, THRUST	1	1	1			
11	90151–05023	SCREW, COUNTERSUNK	2	2	2			
12	90340–14117	PLUG, STRAIGHT SCREW	1	1	1			
13	93210–14369	O-RING	1	1	1			
14	5ND–15431–00	COVER, CRANKCASE 3	1	1	1			
15	5GH–15379–00	SEAL, CRANKCASE	1	1	1			
16	90480–13018	GROMMET	1	1	1			
17	5KM–15351–00	PLUG, DRAIN	1	1	1			
18	95822–06035	BOLT, FLANGE	10	10	10			
19	95822–06045	BOLT, FLANGE	2	2	2			
20	3C2–15492–00	COVER	1	1	1			
21	95022–06025	BOLT, FLANGE	4	4	4			
22	5ND–E5336–00	DAMPER, ENGINE MOUNT 3	2	2	2			
23	5GH–15317–00	SPACER, ENGINE MOUNT	1	1	1			
24	3C2–E5471–00	DUCT, AIR	1	1	1			
25	5BF–1443E–00	PIPE, DRAIN	1	1	1			
26	90467–160A4	CLIP	1	1	1			
27	5ND–E5472–00	SEAL, AIR DUCT	1	1	1			

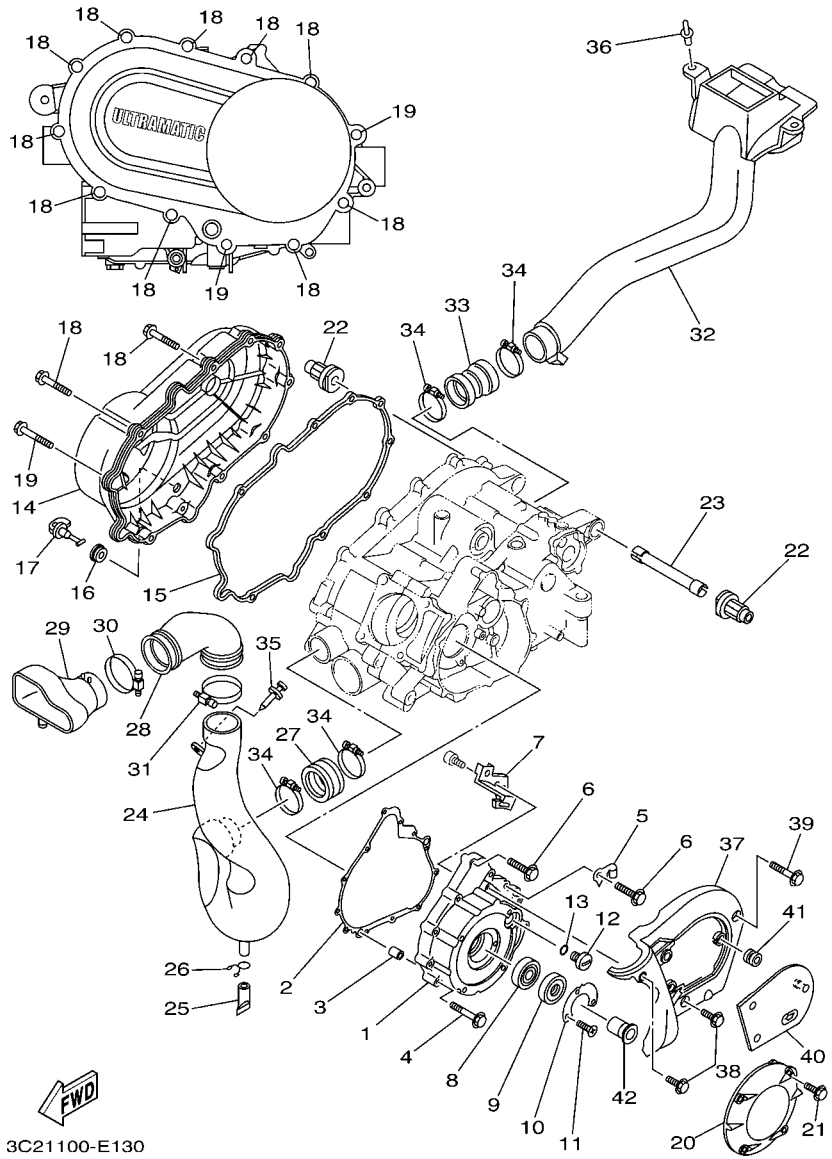

FIG. 13 CRANKCASE COVER 1

REF. NO.	PART NO.	DESCRIPTION	USA	CAN	EUR			REMARKS
28	3C2–E5472–00	SEAL, AIR DUCT	1	1	1			
29	3C2–E2692–00	DUCT, 2	1	1	1			
30	3C2–F1823–00	CLAMP, HOSE	1	1	1			
31	3C2–F1823–00	CLAMP, HOSE	1	1	1			
32	5ND–E5473–00	DUCT, AIR	1	1	1			
33	5ND–E5474–00	SEAL, AIR DUCT	1	1	1			
34	90450–64002	HOSE CLAMP ASSY	4	4	4			
35	90269–06800	RIVET	1	1	1			
36	90269–08813	RIVET	2	2	2			
37	5ND–E5423–00	COVER 2	1	1	1			
38	95022–06014	BOLT, FLANGE	2	2	2			
39	95022–06035	BOLT, FLANGE	1	1	1			
40	5ND–E5413–00	COVER	1	1	1			
41	90480–13398	GROMMET	3	3	3			
42	3GD–15777–10	BOSS, STARTER PULLEY	1	1	1			

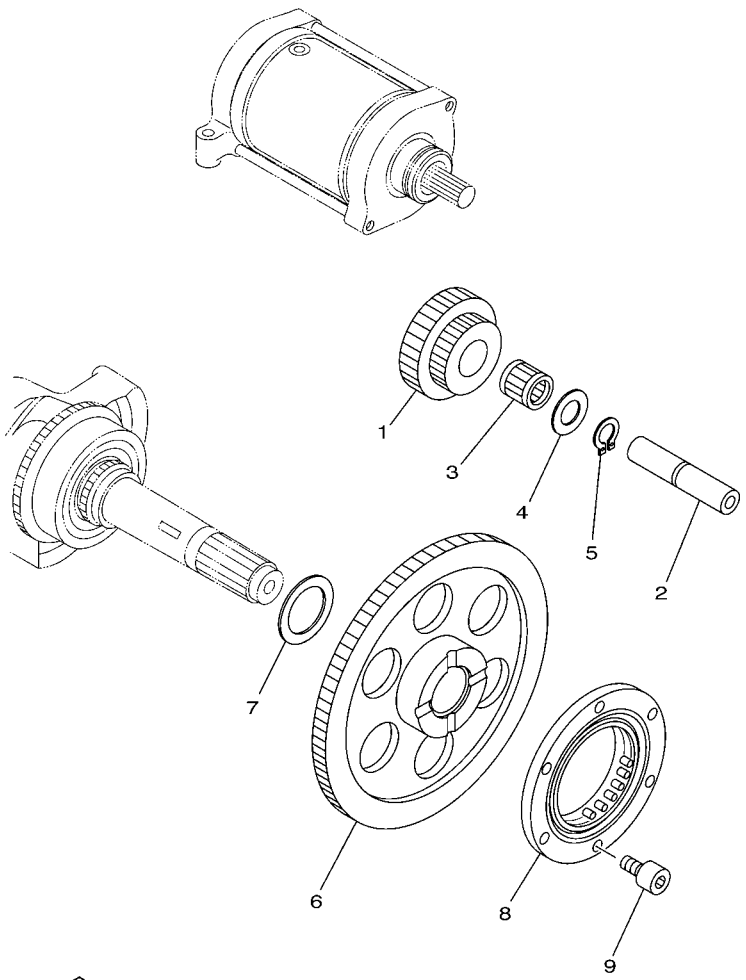

5GHK110-2150

FIG. 14 STARTER CLUTCH

REF. NO.	PART NO.	DESCRIPTION	USA	CAN	EUR			REMARKS
1	5GH–15512–00	GEAR, IDLER 1	1	1	1			
2	4KB–15522–01	SHAFT 2	1	1	1			
3	93310–212R6	BEARING	1	1	1			
4	90201–123K4	WASHER, PLATE	1	1	1			
5	99009–12400	CIRCLIP	1	1	1			
6	5GH–15517–10	GEAR, IDLER 2	1	1	1			
7	90201–25291	WASHER, PLATE	1	1	1			
8	1UY–15590–01	STARTER ONE-WAY ASSY	1	1	1			
9	91312–08016	BOLT	6	6	6			

FIG. 15 CLUTCH

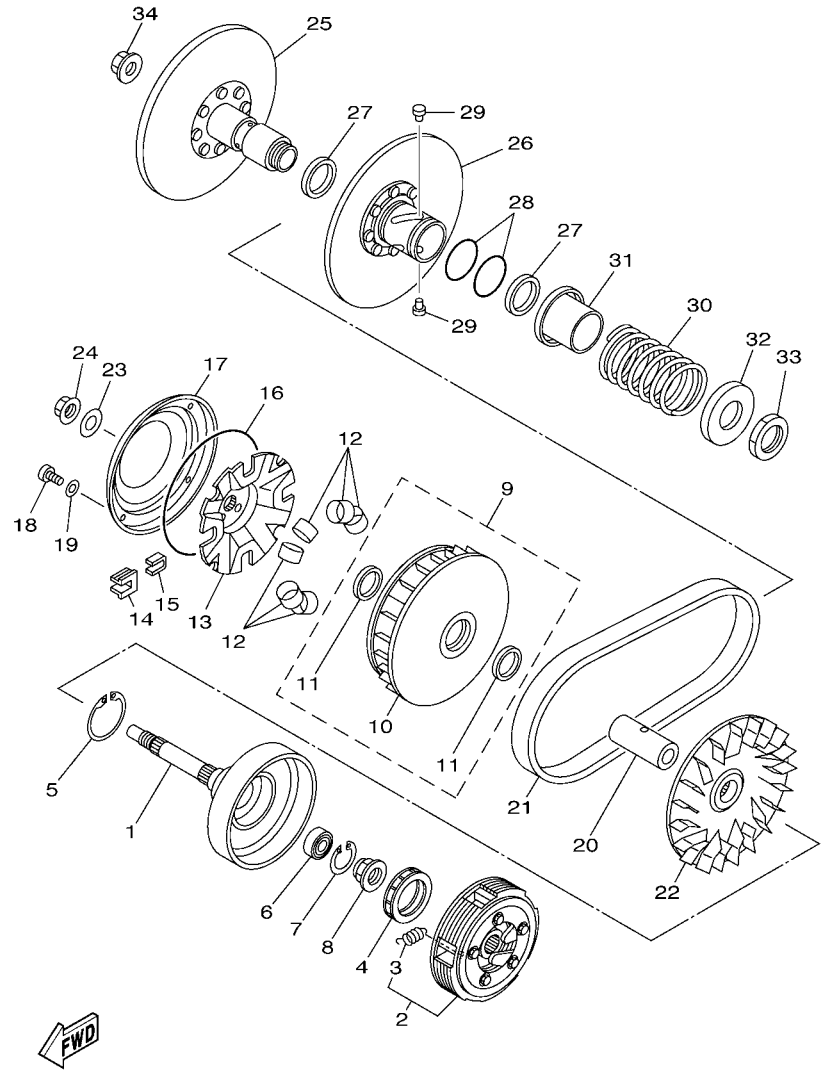

3C24100-F160

REF. NO.	PART NO.	DESCRIPTION	USA	CAN	EUR			REMARKS
1	5GH–16611–10	CLUTCH HOUSING COMP.	1	1	1			
2	5GH–16620–00	CLUTCH CARRIER ASSY	1	1	1			
3	5GH–16626–00	.SPRING, CLUTCH WEIGHT 1	5	5	5			
4	5GH–16664–00	BEARING, ONE WAY	1	1	1			
5	93410–46079	CIRCLIP	1	1	1			
6	93315–21813	BEARING	1	1	1			
7	93450–24062	CIRCLIP	1	1	1			
8	90179–22005	NUT	1	1	1			
9	5GH–17606–00	PRIMARY SLIDING SHEAVE COMP.	1	1	1			
10	5GH–17620–00	.PRIMARY SLIDING SHEAVE COMP.	1	1	1			
11	93101–31167	.OIL SEAL	2	2	2			
12	5GH–17632–00	WEIGHT	8	8	8			
13	5GH–17623–00	CAM	1	1	1			
14	4WV–17653–00	SLIDER	4	4	4			
15	4WV–17654–01	SPACER 1	4	4	4			
16	93211–52001	O-RING	1	1	1			
17	5GH–17639–00	STOPPER	1	1	1			
18	90157–04006	SCREW, PAN HEAD	4	4	4			
19	90201–047R9	WASHER, PLATE	4	4	4			
20	90387–1914K	COLLAR	1	1	1			
21	3C2–17641–00	V-BELT	1	1	1			
22	5UH–17611–00	SHEAVE, PRIMARY FIXED	1	1	1			
23	90201–190T7	WASHER, PLATE	1	1	1			
24	90179–16005	NUT	1	1	1			
25	5GH–17660–10	SECONDARY FIXED SHEAVE COMP.	1	1	1			
26	5GH–17670–00	SECONDARY SLIDING SHEAVE	1	1	1			
27	93104–41119	OIL SEAL	2	2	2			

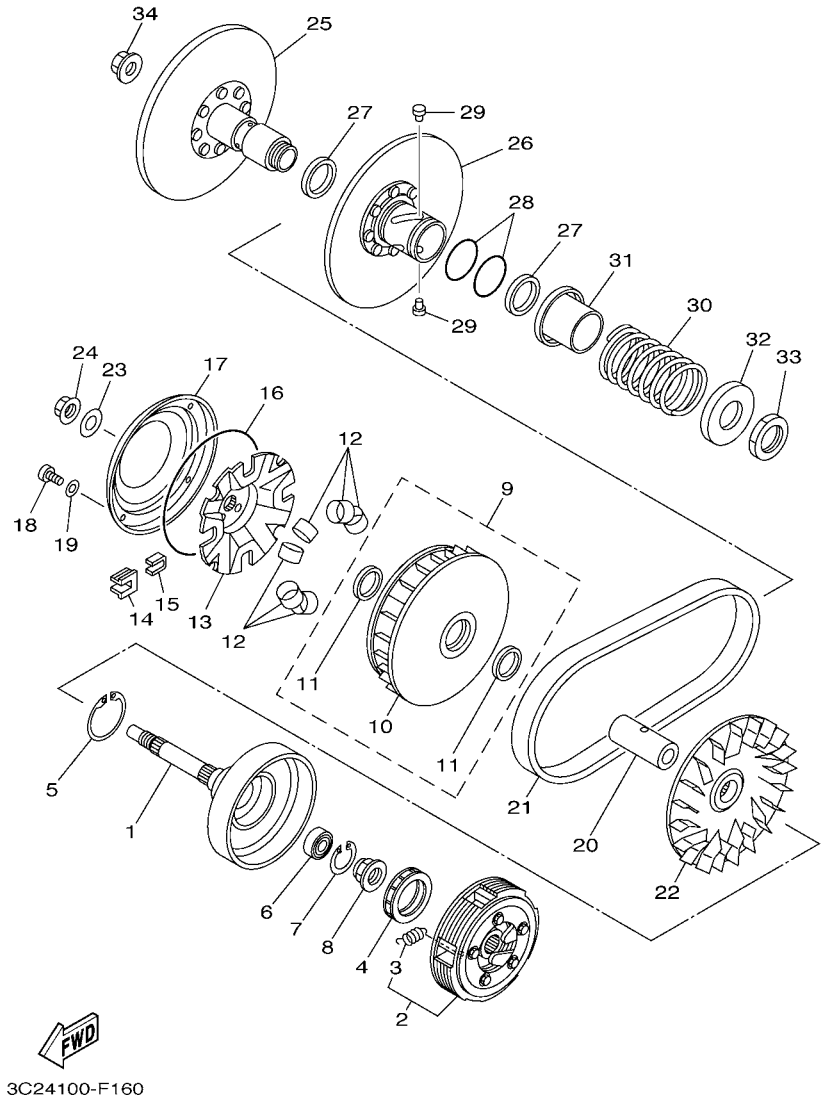

FIG. 15 CLUTCH

REF. NO.	PART NO.	DESCRIPTION	USA	CAN	EUR			REMARKS
28	93210–44545	O-RING	2	2	2			
29	4CW–17664–00	PIN, GUIDE	4	4	4			
30	90501–626L9	SPRING, COMPRESSION	1	1	1			
31	4WV–17684–00	SEAT, SECONDARY SPRING	1	1	1			
32	4WV–17644–00	SEAT,SPRING	1	1	1			
33	90170–36279	NUT	1	1	1			
34	90179–16005	NUT	1	1	1			

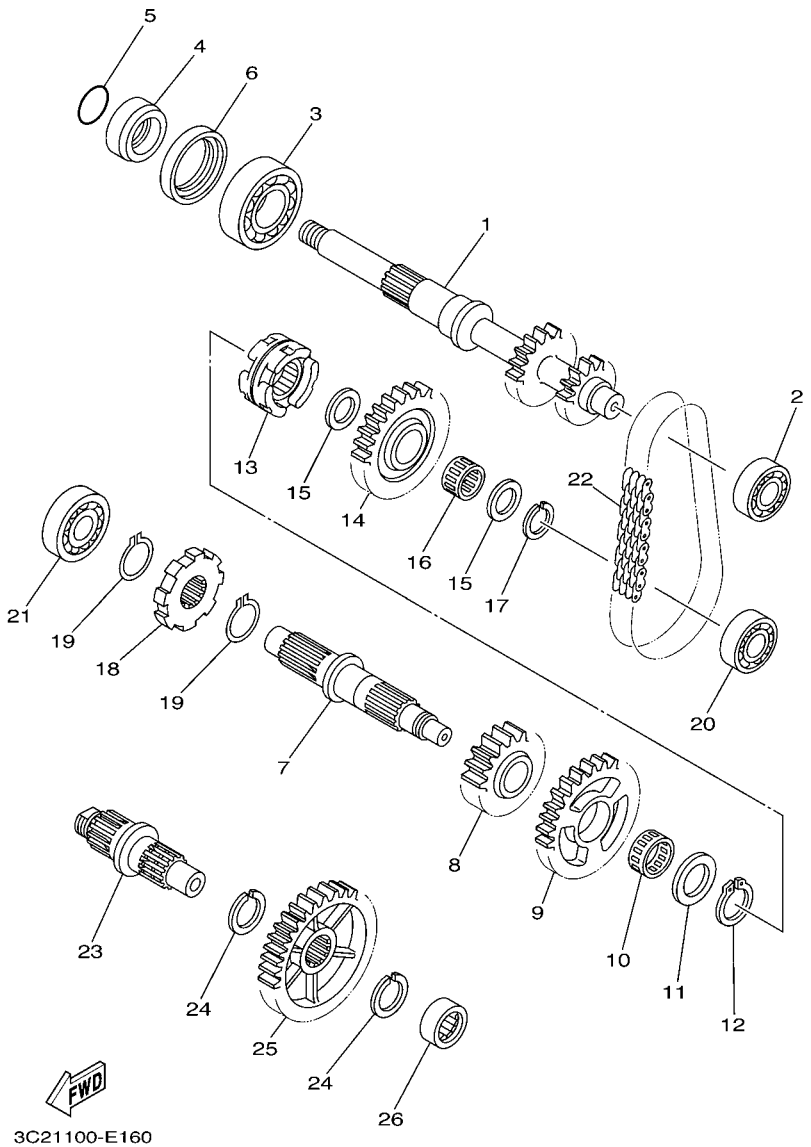

FIG. 16 TRANSMISSION

REF. NO.	PART NO.	DESCRIPTION	USA	CAN	EUR			REMARKS
1	5TE–17681–00	SHAFT, SECONDARY	1	1	1			
2	93306–00415	BEARING	1	1	1			
3	93306–20601	BEARING	1	1	1			
4	90387–26001	COLLAR	1	1	1			
5	93210–26001	O-RING	1	1	1			
6	93102–42004	OIL SEAL	1	1	1			
7	1P1–17402–00	DRIVE AXLE ASSY	1	1	1			
8	5GH–17582–00	GEAR, MIDDLE DRIVE(24T)	1	1	1			
9	5GH–17223–00	GEAR, HIGH WHEEL(38T)	1	1	1			
10	93310–32590	BEARING	1	1	1			
11	90201–250R9	WASHER, PLATE	1	1	1			
12	93440–25084	CIRCLIP	1	1	1			
13	1P1–17285–00	CLUTCH, DOG	1	1	1			
14	5GH–17453–10	SPROCKET, DRIVEN(29T)	1	1	1			
15	90201–20278	WASHER, PLATE	2	2	2			
16	93310–420F2	BEARING	1	1	1			
17	93410–20038	CIRCLIP	1	1	1			
18	5GH–17473–00	STOPPER	1	1	1			
19	93440–25084	CIRCLIP	2	2	2			
20	93306–30201	BEARING	1	1	1			
21	93306–20464	BEARING	1	1	1			
22	94591–54038	CHAIN(23RH302-38 ASM)	1	1	1			
23	5ND–17523–00	SHAFT	1	1	1			
24	93440–25084	CIRCLIP	2	2	2			
25	5GH–17583–00	GEAR, MIDDLE DRIVEN(39T)	1	1	1			
26	93311–42077	BEARING	1	1	1			

FIG. 17 MIDDLE DRIVE GEAR

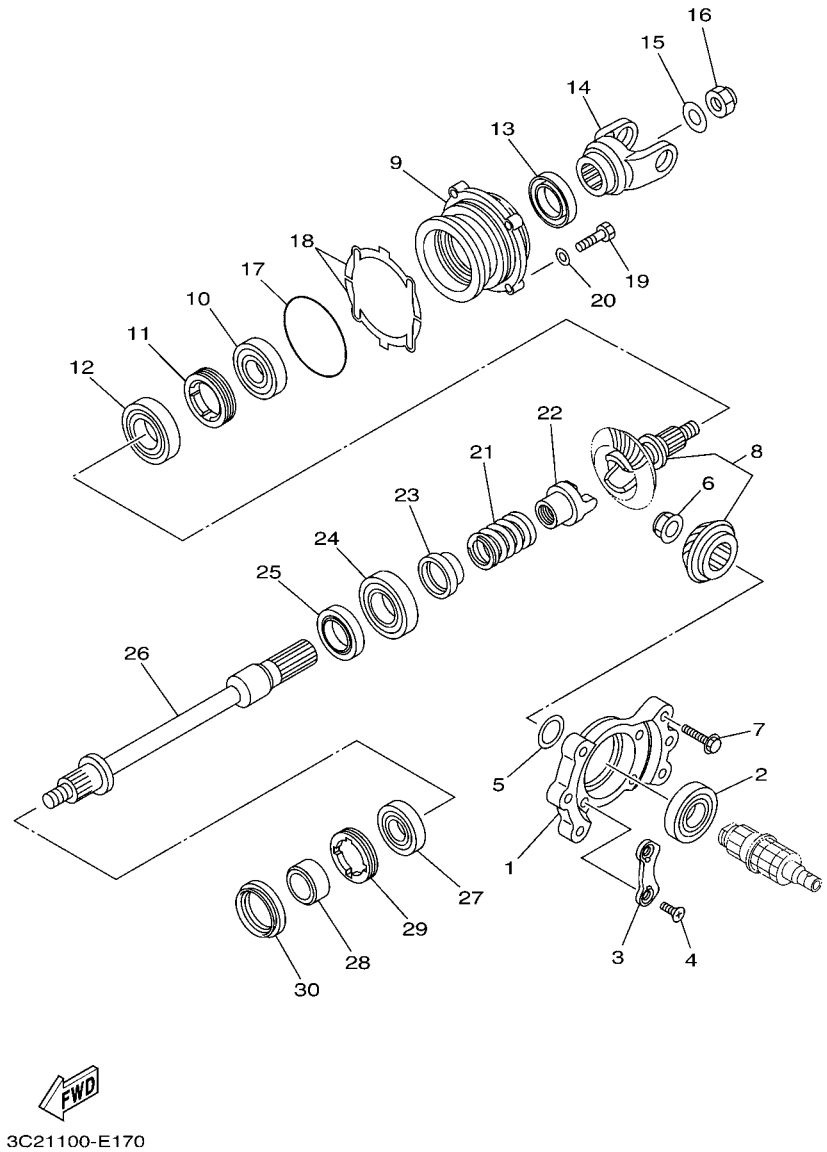

REF. NO.	PART NO.	DESCRIPTION	USA	CAN	EUR			REMARKS
1	5GH–17521–00	HOUSING, BEARING	1	1	1			
2	93306–20622	BEARING	1	1	1			
3	11H–15383–02	PLATE, BEARING COVER	2	2	2			
4	90149–08013	SCREW	4	4	4			
5	52G–17531–01	SHIM, PINION (0.1T)	1	1	1			UR
	52G–17531–11	SHIM, PINION (0.15T)	1	1	1			UR
	52G–17531–21	SHIM, PINION (0.2T)	1	1	1			UR
	52G–17531–31	SHIM, PINION (0.3T)	1	1	1			UR
	52G–17531–41	SHIM, PINION (0.4T)	1	1	1			UR
	52G–17531–51	SHIM, PINION (0.5T)	1	1	1			UR
6	90179–22015	NUT	1	1	1			
7	90105–08150	BOLT, FLANGE	6	6	6			
8	4WV–17530–00	PINION SET	1	1	1			
9	5GH–17551–00	HOUSING, BEARING	1	1	1			
10	93306–30538	BEARING	1	1	1			
11	90179–65305	NUT	1	1	1			
12	93306–20715	BEARING	1	1	1			
13	93101–35097	OIL SEAL	1	1	1			
14	5UH–17556–00	YOKE, JOINT	1	1	1			
15	90201–14633	WASHER, PLATE	1	1	1			
16	90185–14009	NUT, SELF-LOCKING	1	1	1			
17	93210–78544	O-RING	1	1	1			
18	5GH–17531–00	SHIM, PINION (0.1T)	2	2	2			UR
	5GH–17531–10	SHIM, PINION (0.15T)	2	2	2			UR
	5GH–17531–20	SHIM, PINION (0.2T)	2	2	2			UR
	5GH–17531–30	SHIM, PINION (0.3T)	2	2	2			UR
	5GH–17531–40	SHIM, PINION (0.4T)	2	2	2			UR

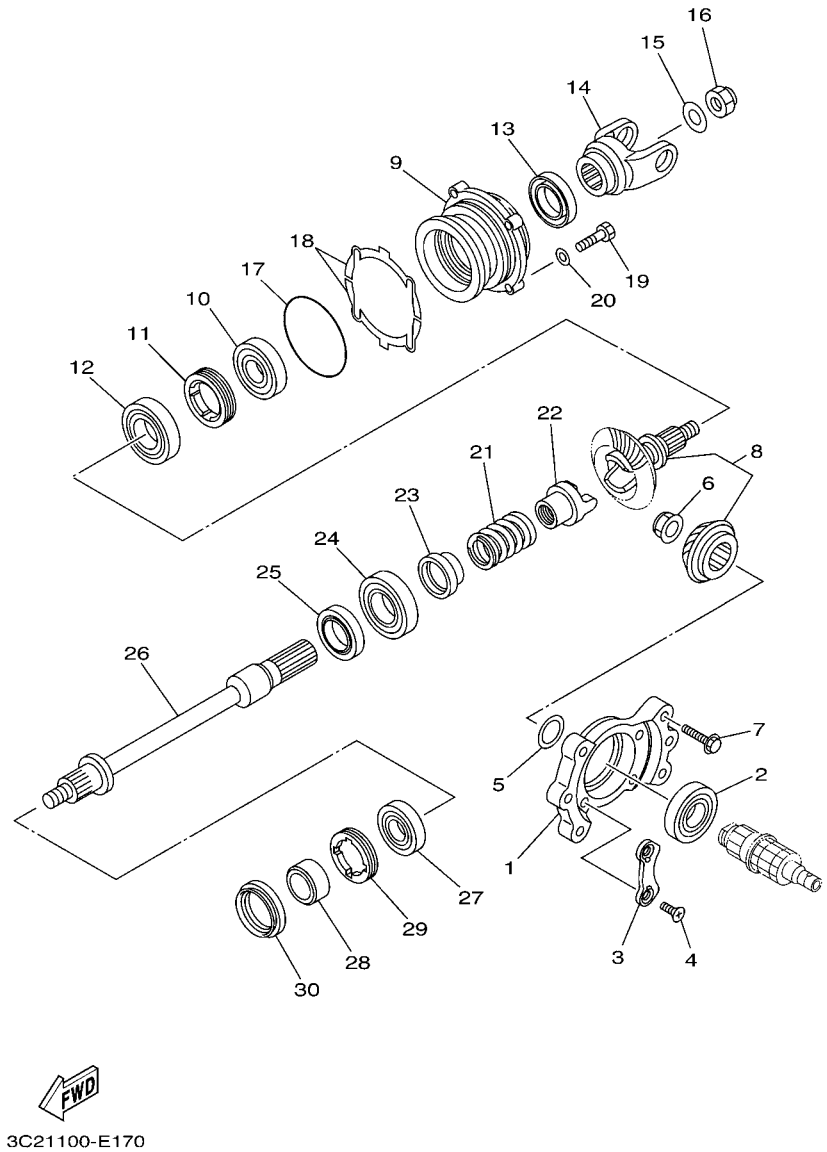

FIG. 17 MIDDLE DRIVE GEAR

REF. NO.	PART NO.	DESCRIPTION	USA	CAN	EUR			REMARKS
18	5GH–17531–50	SHIM, PINION (0.5T)	2	2	2			UR
	5GH–17531–60	SHIM, PINION (0.6T)	2	2	2			UR
19	97022–08030	BOLT	4	4	4			
20	92902–08600	WASHER, PLATE	4	4	4			
21	90501–650L5	SPRING, COMPRESSION	1	1	1			
22	4VR–17527–00	CAM, DRIVEN	1	1	1			
23	5UH–17585–00	COLLAR, GEAR	1	1	1			
24	93306–00612	BEARING	1	1	1			
25	93102–30170	OIL SEAL	1	1	1			
26	5UH–1761A–00	SHAFT, 1	1	1	1			
27	93306–20582	BEARING	1	1	1			
28	90387–252R2	COLLAR	1	1	1			
29	90179–55660	NUT	1	1	1			
30	93102–35380	OIL SEAL	1	1	1			

FIG. 18 SHIFT CAM & FORK

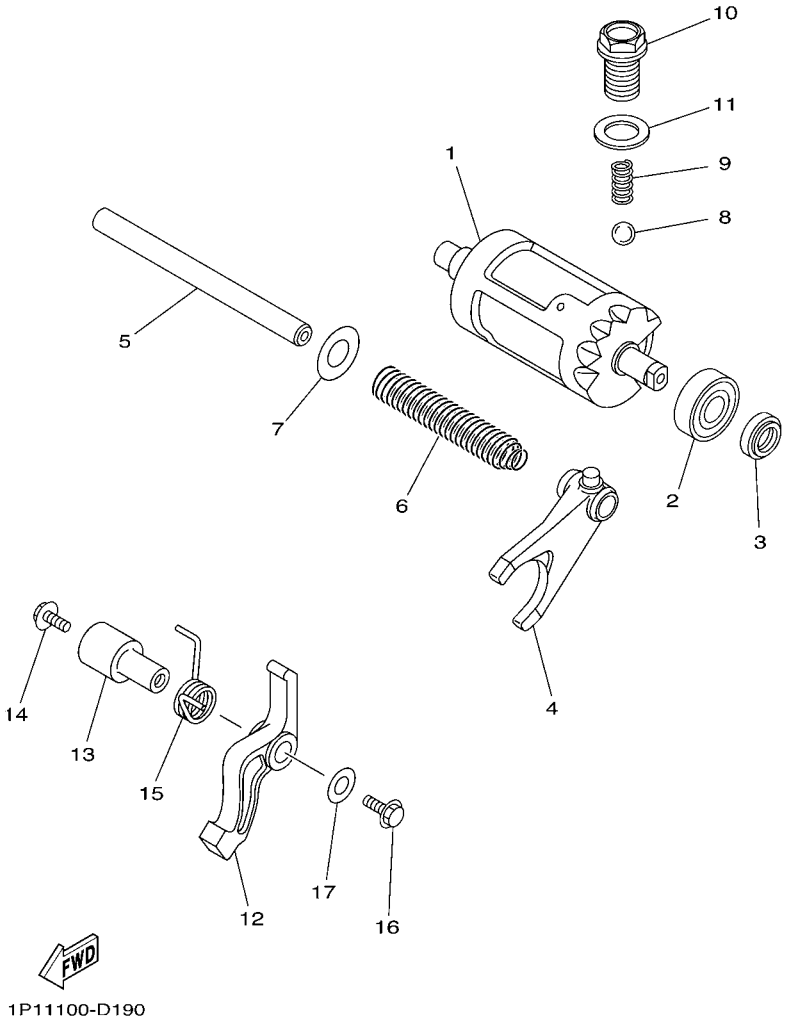

REF. NO.	PART NO.	DESCRIPTION	USA	CAN	EUR			REMARKS
1	1P1–18540–00	SHIFT CAM ASSY	1	1	1			
2	93306–00208	BEARING	1	1	1			
3	93102–15212	OIL SEAL	1	1	1			
4	1D9–18511–00	FORK, SHIFT 1	1	1	1			
5	4KB–18531–01	BAR, SHIFT FORK GUIDE 1	1	1	1			
6	90501–160A1	SPRING, COMPRESSION	1	1	1			
7	90201–15564	WASHER, PLATE (1.5T)	1	1	1			
8	93503–08007	BALL	1	1	1			
9	90501–10353	SPRING, COMPRESSION	1	1	1			
10	90105–14003	BOLT, FLANGE	1	1	1			
11	90430–14194	GASKET	1	1	1			
12	5GH–18148–00	LEVER, STOPPER	1	1	1			
13	5GH–1812E–00	SHAFT, STOPPER	1	1	1			
14	95022–06016	BOLT, FLANGE	1	1	1			
15	90508–235B7	SPRING, TORSION	1	1	1			
16	95022–06014	BOLT, FLANGE	1	1	1			
17	90201–06060	WASHER, PLATE	1	1	1			

FIG. 19 SHIFT SHAFT

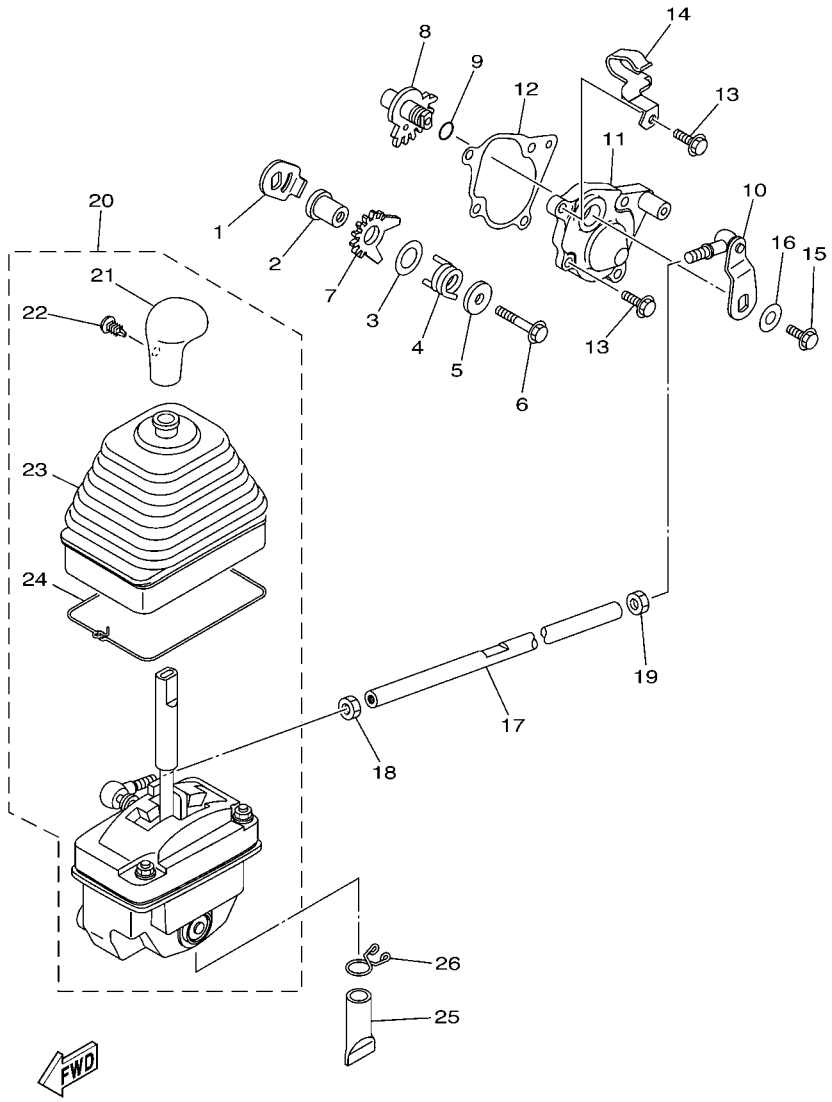

REF. NO.	PART NO.	DESCRIPTION	USA	CAN	EUR			REMARKS
1	4SH–18198–00	LEVER	1	1	1			
2	90387–0613B	COLLAR	1	1	1			
3	90201–132G5	WASHER, PLATE	1	1	1			
4	90508–35764	SPRING, TORSION	1	1	1			
5	90201–06036	WASHER, PLATE	1	1	1			
6	95812–06035	BOLT, FLANGE	1	1	1			
7	5KM–18191–00	LEVER	1	1	1			
8	5GH–18197–00	SHAFT	1	1	1			
9	93210–11073	O-RING	1	1	1			
10	5GH–18104–00	SHIFT GUIDE COMP.	1	1	1			
11	5GH–18129–01	COVER, SHIFT SHAFT	1	1	1			
12	5GH–18146–00	GASKET	1	1	1			
13	97080–06020	BOLT	4	4	4			
14	90465–08336	CLAMP	1	1	1			
15	95812–06016	BOLT, FLANGE	1	1	1			
16	90201–06036	WASHER, PLATE	1	1	1			
17	3C2–18115–00	ROD, SHIFT	1	1	1			
18	90170–08358	NUT	1	1	1			
19	95302–08700	NUT	1	1	1			
20	1P1–18300–01	SHIFTER ASSY	1	1	1			
21	1P1–18174–00	.KNOB, SHIFT LEVER	1	1	1			
22	90269–05055	.RIVET	1	1	1			
23	5GH–18131–00	.BOOT, SEALING	1	1	1			
24	5GH–18617–00	.STOPPER,RUBBER	1	1	1			
25	5BF–1443E–00	PIPE, DRAIN	1	1	1			
26	90467–150A2	CLIP	1	1	1			

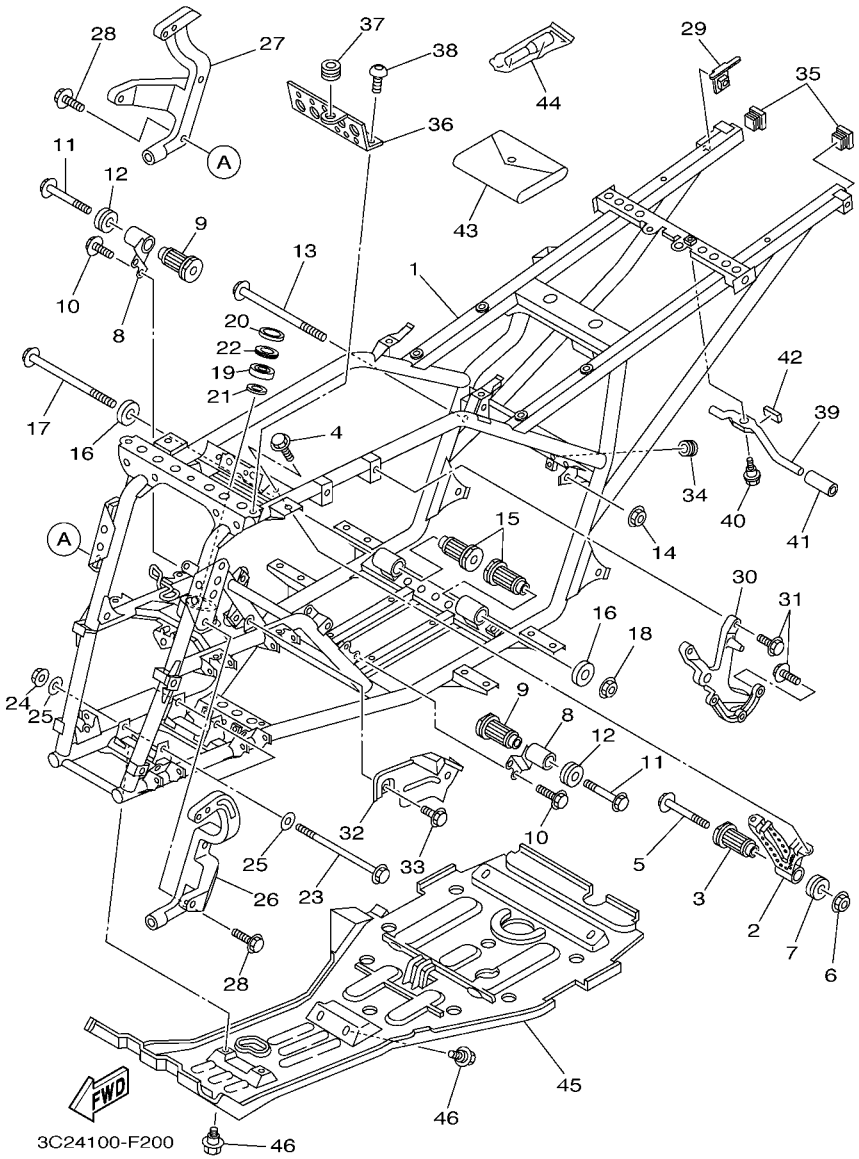

FIG. 20 FRAME

REF. NO.	PART NO.	DESCRIPTION	USA	CAN	EUR			REMARKS
1	3C2–F1110–00	FRAME COMP.	1	1	1			
2	5ND–F1315–01	STAY, ENGINE 2	1	1	1			
3	5ND–E5336–00	DAMPER, ENGINE MOUNT 3	1	1	1			
4	95812–08012	BOLT, FLANGE	2	2	2			
5	95812–10110	BOLT, FLANGE	1	1	1			
6	95602–10200	NUT, U FLANGE	1	1	1			
7	5ND–F1486–00	DAMPER 2	1	1	1			
8	5ND–F1316–01	STAY, ENGINE 3	2	2	2			
9	5ND–E5336–00	DAMPER, ENGINE MOUNT 3	2	2	2			
10	95812–08012	BOLT, FLANGE	4	4	4			
11	95812–10080	BOLT, FLANGE	2	2	2			
12	5ND–F1486–00	DAMPER 2	2	2	2			
13	90105–10284	BOLT, FLANGE	1	1	1			
14	95602–10200	NUT, U FLANGE	1	1	1			
15	5ND–E5336–00	DAMPER, ENGINE MOUNT 3	2	2	2			
16	5ND–F1488–00	DAMPER	2	2	2			
17	90105–10284	BOLT, FLANGE	1	1	1			
18	95602–10200	NUT, U FLANGE	1	1	1			
19	93306–203YN	BEARING	1	1	1			
20	93102–25081	OIL SEAL	1	1	1			
21	93102–25099	OIL SEAL	1	1	1			
22	2GU–23872–00	HOLDER, BEARING	1	1	1			
23	90105–10051	BOLT, FLANGE	2	2	2			
24	95602–10200	NUT, U FLANGE	2	2	2			
25	90201–10035	WASHER, PLATE	4	4	4			
26	3C2–F831V–00	STAY, HEAD LIGHT 1	1	1	1			
27	3C2–F832V–00	STAY, HEAD LIGHT 2	1	1	1			

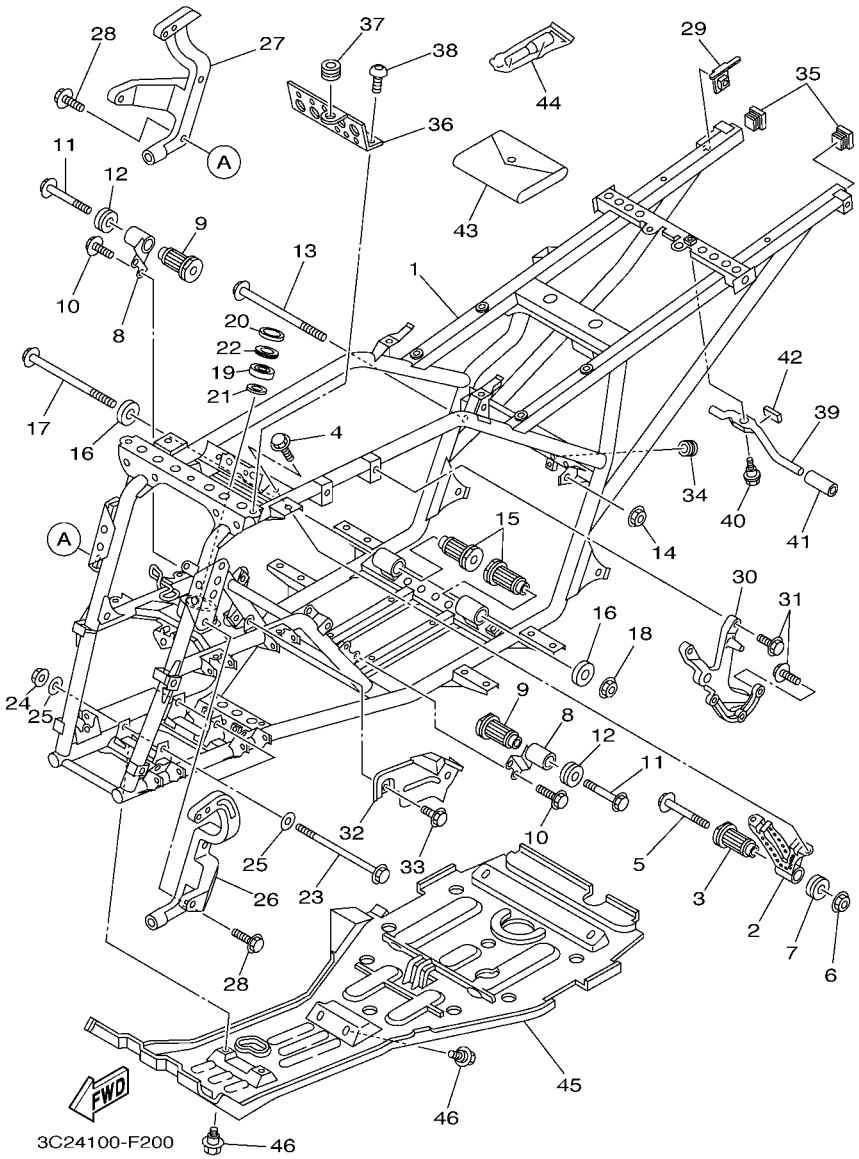

FIG. 20 FRAME

REF. NO.	PART NO.	DESCRIPTION	USA	CAN	EUR			REMARKS
28	95812–08025	BOLT, FLANGE	4	4	4			
29	3C2–F1446–01	STAY, MUFFLER 2	1	1	1			
30	5ND–F1585–01	ARM	1	1	1			
31	95822–08020	BOLT, FLANGE	5	5	5			
32	5ND–F2825–00	PROTECTOR 1	1	1	1			
33	95812–06010	BOLT, FLANGE	2	2	2			
34	90480–10517	GROMMET	1	1	1			
35	5FU–F111A–00	CAP, MAIN PIPE	2	2	2			
36	3C2–F1228–00	BRACKET, RESERVE TANK	1	1	1			
37	90480–13004	GROMMET	1	1	1			
38	90149–06280	SCREW	2	2	2			
39	3C2–K7173–00	LEVER, LATCH 1	1	1	1			
40	90109–06172	BOLT	1	1	1			
41	JJ3–K818M–00	CAP, PROTECTOR END 4	1	1	1			
42	3C2–F4144–00	HOLDER, DAMPER	1	1	1			
43	5ND–F8100–00	TOOL KIT	1	1	1			
44	1NV–2811A–01	GAUGE, AIR	1	1	1			
45	5ND–F147A–02	GUARD, ENGINE 1	1	1	1			
46	90109–06172	BOLT	8	8	8			

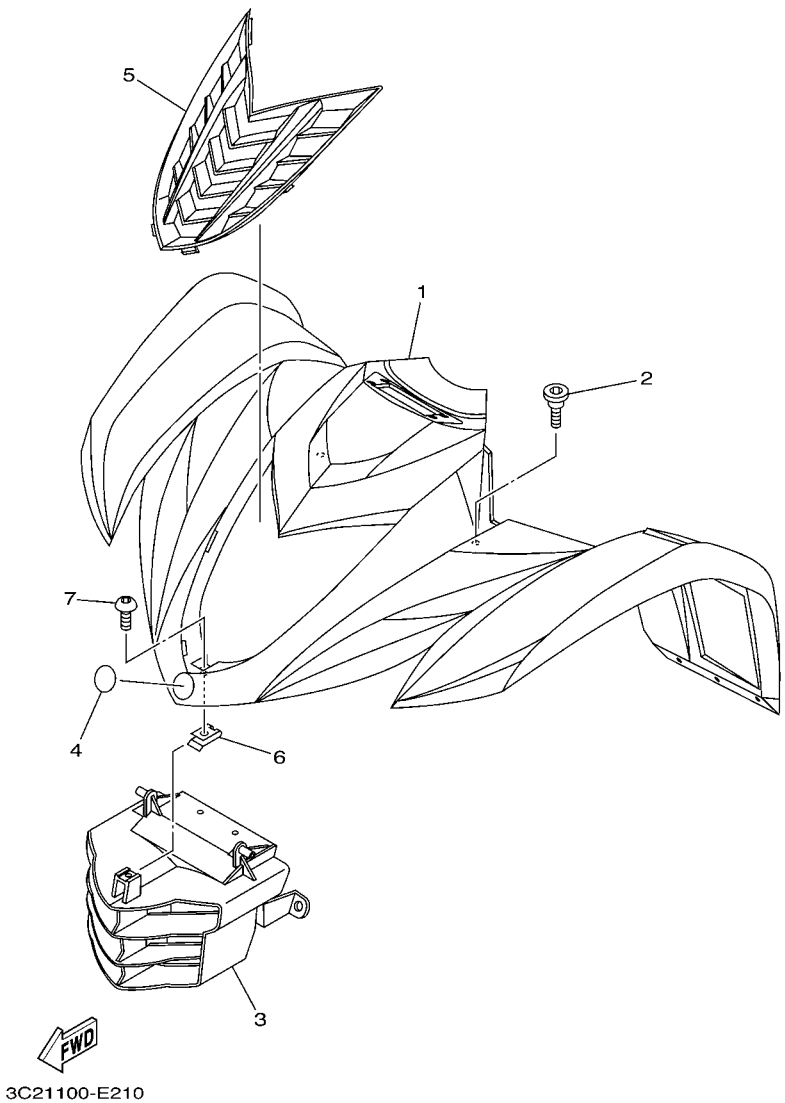

FIG. 21 FRONT FENDER

REF. NO.	PART NO.	DESCRIPTION	USA	CAN	EUR			REMARKS
1	3C2–F1500–00	FRONT FENDER ASSY	1	1				UR FOR DPBSE
	3C2–F1500–40	FRONT FENDER ASSY	1	1				UR FOR PGD
	3C2–F1500–20	FRONT FENDER ASSY			1			UR FOR DPBSE
	3C2–F1500–50	FRONT FENDER ASSY			1			UR FOR PGD
2	90109–08076	BOLT	2	2	2			
3	3C2–F8309–00	GRILLE, FRONT	1	1	1			
4	3C2–F836B–00	TUNING FORK MARK	1	1	1			
5	3C2–F1556–A0	FENDER, FRONT 2	1	1	1			UR FOR DPBSE
	3C2–F1556–80	FENDER, FRONT 2	1	1	1			UR FOR PGD
6	90183–050A8	NUT, SPRING	1	1	1			
7	90110–05201	BOLT, HEXAGON SOCKET HEAD	1	1	1			

FIG. 22 REAR FENDER

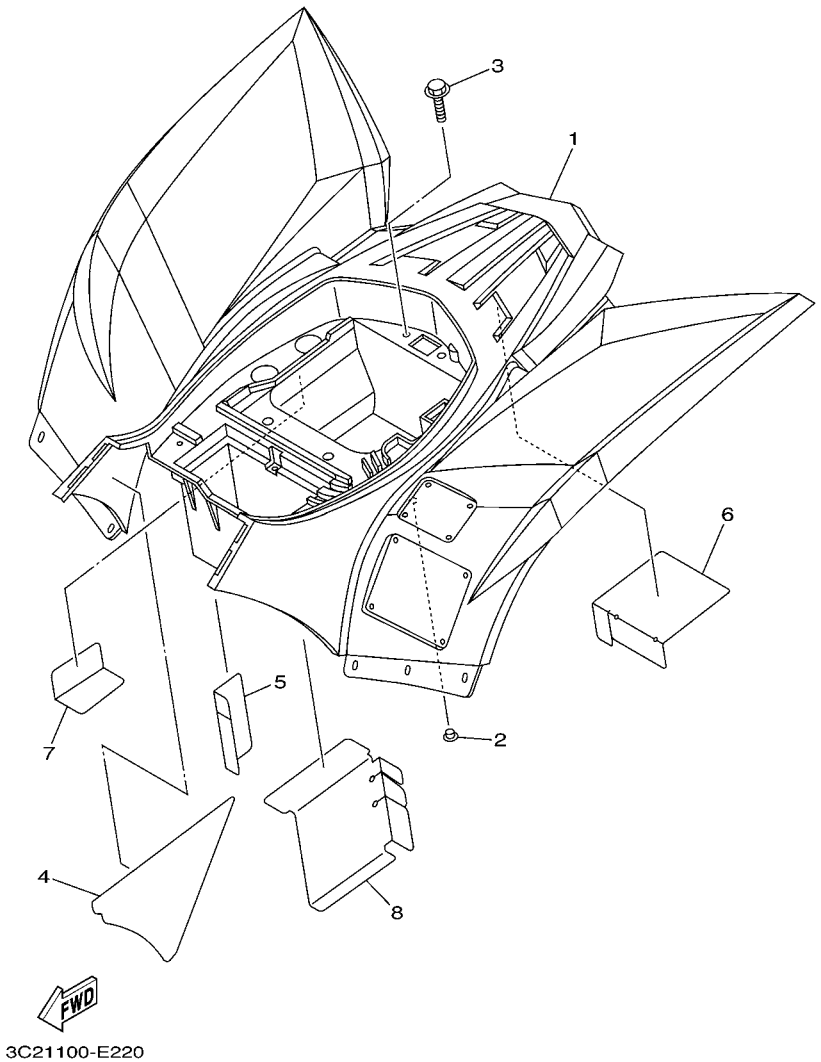

REF. NO.	PART NO.	DESCRIPTION	USA	CAN	EUR			REMARKS
1	3C2–F1600–00	REAR FENDER ASSY.	1	1				UR FOR DPBSE
	3C2–F1600–40	REAR FENDER ASSY.	1	1				UR FOR PGD
	3C2–F1600–20	REAR FENDER ASSY.			1			UR FOR DPBSE
	3C2–F1600–50	REAR FENDER ASSY.			1			UR FOR PGD
2	90338–09801	PLUG	2	2	2			
3	90119–06157	BOLT, WITH WASHER	1	1	1			
4	3C2–F163A–00	COVER, REAR FENDER 1	1	1	1			
5	5ND–F163E–00	COVER, REAR FENDER 2	1	1	1			
6	5ND–F1652–00	PROTECTOR	1	1	1			
7	5FU–F174A–01	INSULATOR, SIDE COVER	1	1	1			
8	5ND–F163F–00	COVER, REAR FENDER 3	1	1	1			

FIG. 23 SIDE COVER

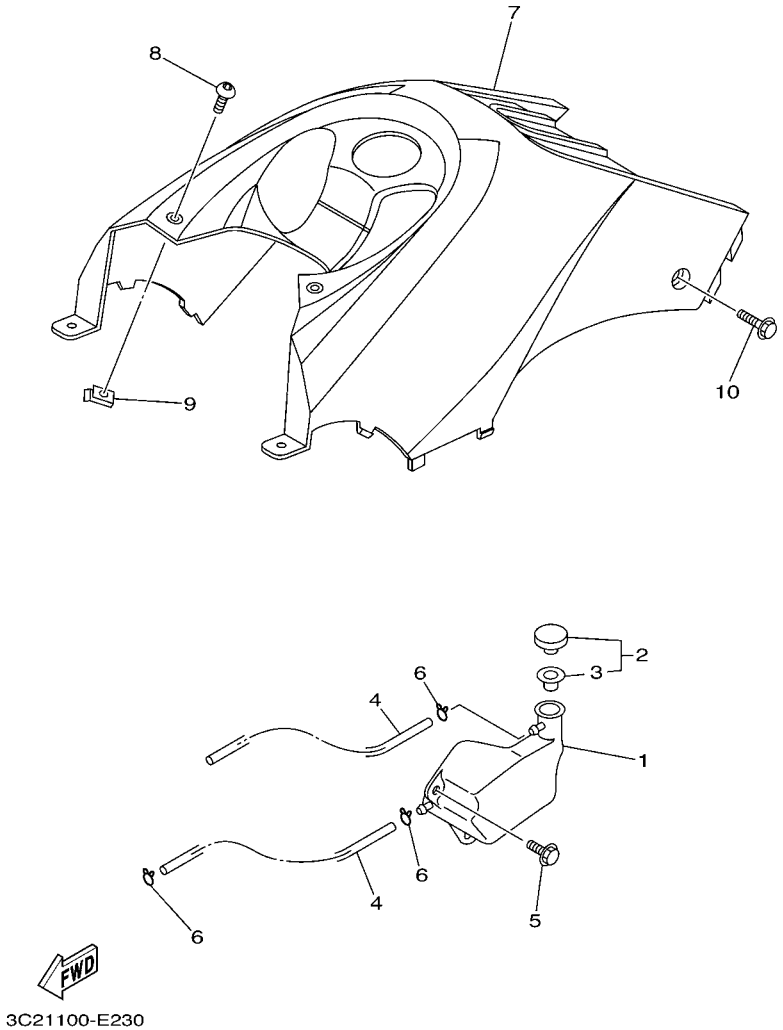

REF. NO.	PART NO.	DESCRIPTION	USA	CAN	EUR			REMARKS
1	5ND–F1871–00	TANK, RECOVERY	1	1	1			
2	1AA–21815–00	CAP	1	1	1			
3	1AA–21874–00	.GASKET	1	1	1			
4	90445–081K8	HOSE (L780)	2	2	2			
5	90119–06157	BOLT, WITH WASHER	2	2	2			
6	90467–08003	CLIP	3	3	3			
7	3C2–F171A–30	COVER, TOP	1	1	1			UR FOR DPBSE
	3C2–F171A–80	COVER, TOP	1	1	1			UR FOR PGD
8	90110–05201	BOLT, HEXAGON SOCKET HEAD	2	2	2			
9	90183–050A8	NUT, SPRING	2	2	2			
10	90110–06007	BOLT, HEXAGON SOCKET HEAD	2	2	2			

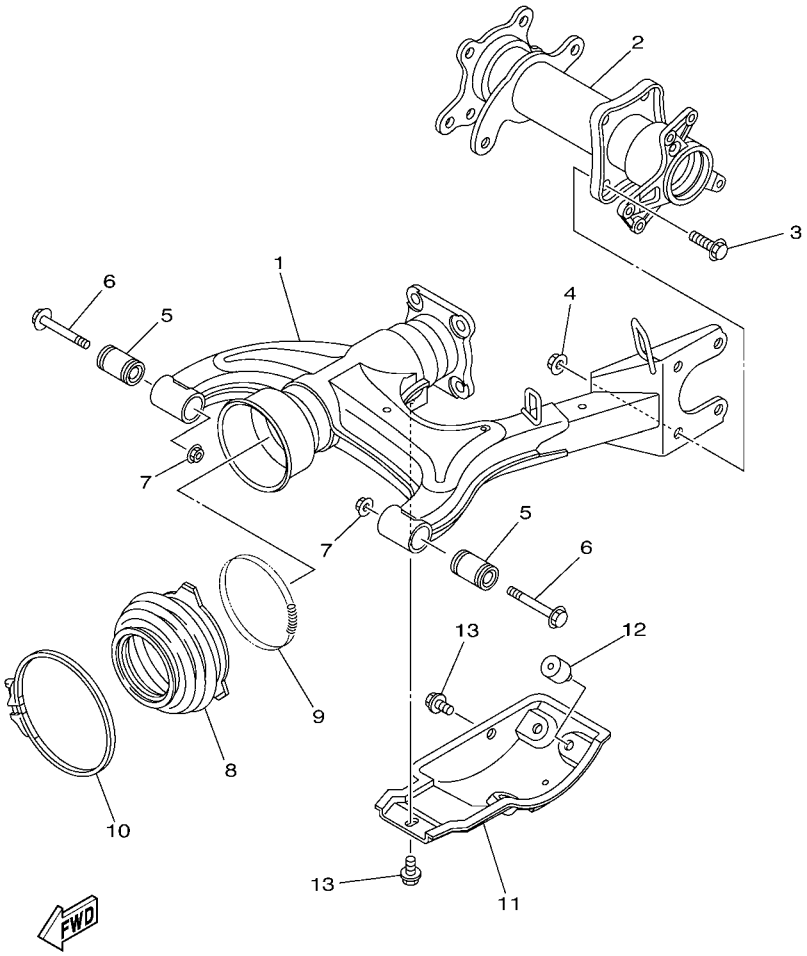

FIG. 24 REAR ARM

REF. NO.	PART NO.	DESCRIPTION	USA	CAN	EUR			REMARKS
1	3C2–F2110–00	REAR ARM COMP.	1	1	1			
2	5ND–G6540–13	REAR AXLE HOUSING COMP.	1	1	1			
3	95812–10020	BOLT, FLANGE	4	4	4			
4	95702–10500	NUT, WITH WASHER	4	4	4			
5	5ND–F2123–00	BUSH 1	2	2	2			
6	90105–12057	BOLT, FLANGE	2	2	2			
7	95602–12200	NUT, SELF-LOCKING	2	2	2			
8	5ND–F2189–00	BOOT, RUBBER	1	1	1			
9	90506–07135	SPRING, TENSION	1	1	1			
10	90460–85277	CLAMP, HOSE	1	1	1			
11	4XE–F219X–01	COVER	1	1	1			
12	109–27114–00	STOPPER, MAIN STAND	3	3	3			
13	95802–08012	BOLT, FLANGE	2	2	2			

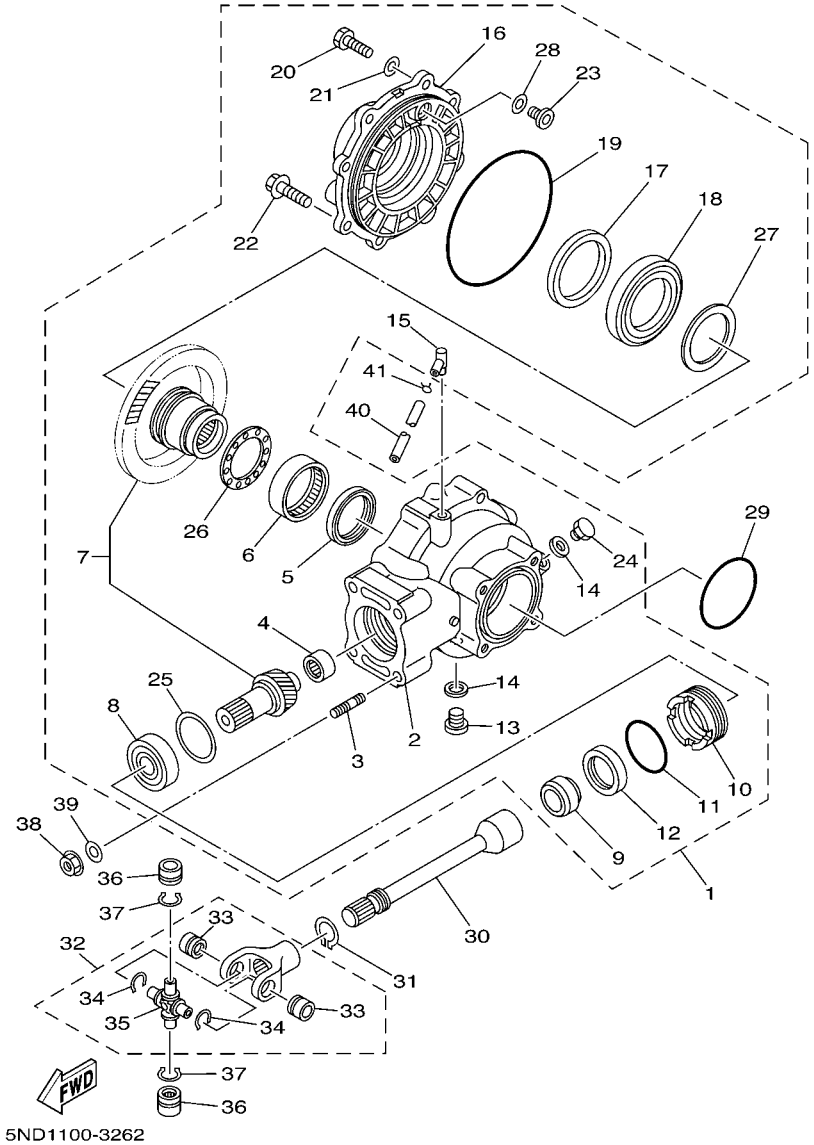

FIG. 25 DRIVE SHAFT

REF. NO.	PART NO.	DESCRIPTION	USA	CAN	EUR			REMARKS
1	5ND–G6101–03	REAR AXLE GEAR CASE ASSY	1	1	1			
2	5ND–G6151–01	.HOUSING, DRIVE SHAFT	1	1	1			
3	90116–10593	.BOLT, STUD	4	4	4			
4	4XE–G6102–00	.BEARING ASSY	1	1	1			
5	93101–52116	.OIL SEAL	1	1	1			
6	93317–855Y9	.BEARING	1	1	1			
7	5GT–Y4612–00	.RING GEAR SET	1	1	1			
8	93306–305Y6	.BEARING	1	1	1			
9	90387–255H9	.COLLAR	1	1	1			
10	29U–46125–00	.RETAINER, BEARING	1	1	1			
11	93210–59531	.O-RING	1	1	1			
12	93101–38098	.OIL SEAL	1	1	1			
13	90340–14046	.PLUG, STRAIGHT SCREW	1	1	1			
14	214–11198–01	.GASKET	2	2	2			
15	2N4–15371–00	.BREATHER	1	1	1			
16	5ND–G6152–00	.HOUSING, BEARING	1	1	1			
17	93102–65386	.OIL SEAL	1	1	1			
18	93316–013Y0	.BEARING	1	1	1			
19	93211–51749	.O-RING	1	1	1			
20	97022–08025	.BOLT	6	6	6			
21	92902–08600	.WASHER, PLATE	6	6	6			
22	95812–10025	.BOLT, FLANGE	2	2	2			
23	5FU–G6156–00	.STOPPER, RING GEAR	1	1	1			
24	90340–14029	.PLUG, STRAIGHT SCREW	1	1	1			
25	4XE–E7537–15	.SHIM, THRUST(T=0.15MM)	1	1	1			UR
	4XE–E7537–30	.SHIM, THRUST(T=0.30MM)	1	1	1			UR
	4XE–E7537–40	.SHIM, THRUST(T=0.40MM)	1	1	1			UR

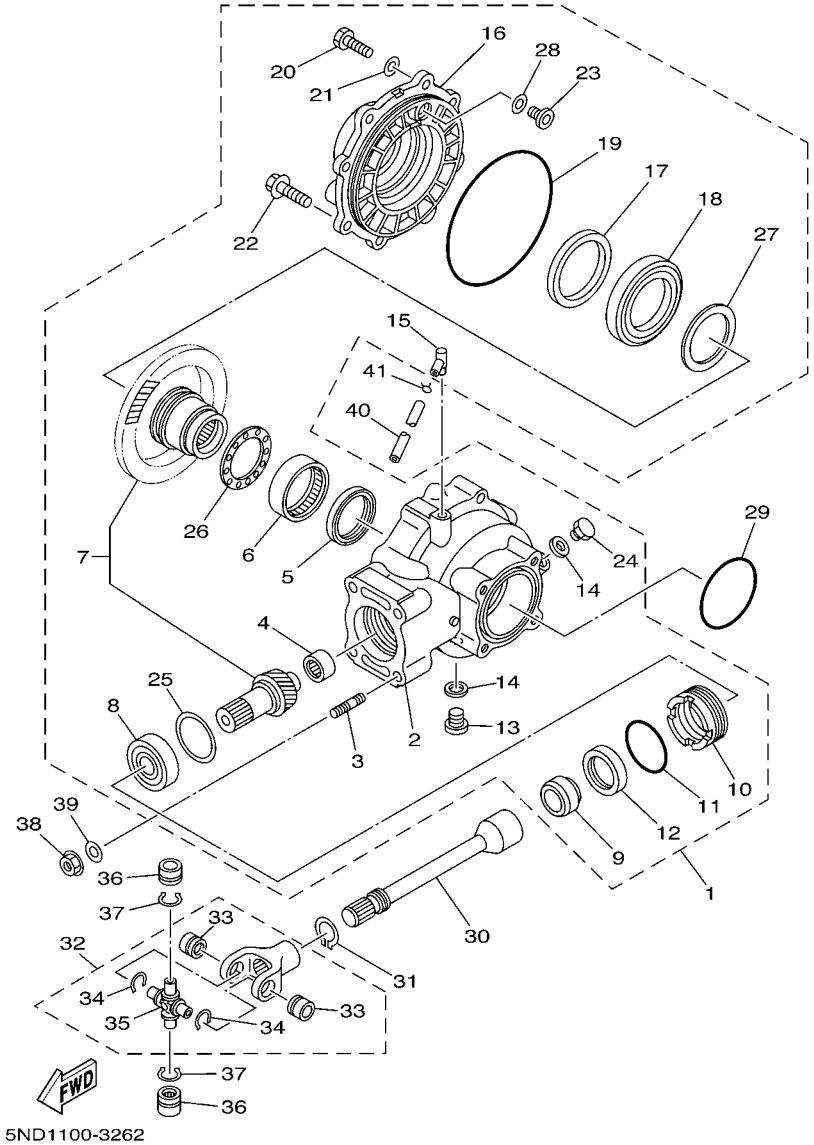

FIG. 25 DRIVE SHAFT

REF. NO.	PART NO.	DESCRIPTION	USA	CAN	EUR			REMARKS
25	4XE–E7537–45	.SHIM, THRUST(T=0.45MM)	1	1	1			UR
	4XE–E7537–50	.SHIM, THRUST(T=0.50MM)	1	1	1			UR
	4XE–E7537–60	.SHIM, THRUST(T=0.60MM)	1	1	1			UR
26	4XE–G6118–10	.SHIM, THRUST(T=1.0MM)	1	1	1			UR
	4XE–G6118–11	.SHIM, THRUST(T=1.1MM)	1	1	1			UR
	4XE–G6118–12	.SHIM, THRUST(T=1.2MM)	1	1	1			UR
	4XE–G6118–13	.SHIM, THRUST(T=1.3MM)	1	1	1			UR
	4XE–G6118–14	.SHIM, THRUST(T=1.4MM)	1	1	1			UR
	4XE–G6118–15	.SHIM, THRUST(T=1.5MM)	1	1	1			UR
	4XE–G6118–16	.SHIM, THRUST(T=1.6MM)	1	1	1			UR
	4XE–G6118–17	.SHIM, THRUST(T=1.7MM)	1	1	1			UR
	4XE–G6118–18	.SHIM, THRUST(T=1.8MM)	1	1	1			UR
	4XE–G6118–19	.SHIM, THRUST(T=1.9MM)	1	1	1			UR
	4XE–G6118–20	.SHIM, THRUST(T=2.0MM)	1	1	1			UR
	4XE–G6118–21	.SHIM, THRUST(T=2.1MM)	1	1	1			UR
27	4XE–G6117–25	.SHIM, RING GEAR(T=0.25MM)	1	1	1			UR
	4XE–G6117–30	.SHIM, RING GEAR(T=0.30MM)	1	1	1			UR
	4XE–G6117–35	.SHIM, RING GEAR(T=0.35MM)	1	1	1			UR
	4XE–G6117–40	.SHIM, RING GEAR(T=0.40MM)	1	1	1			UR
	4XE–G6117–45	.SHIM, RING GEAR(T=0.45MM)	1	1	1			UR
	4XE–G6117–50	.SHIM, RING GEAR(T=0.50MM)	1	1	1			UR
28	5FU–G6157–10	.SHIM, RING GEAR(T=0.10MM)	1	1	1			UR
	5FU–G6157–15	.SHIM, RING GEAR(T=0.15MM)	1	1	1			UR
	5FU–G6157–20	.SHIM, RING GEAR(T=0.20MM)	1	1	1			UR
	5FU–G6157–30	.SHIM, RING GEAR(T=0.30MM)	1	1	1			UR
	5FU–G6157–40	.SHIM, RING GEAR(T=0.40MM)	1	1	1			UR
	5FU–G6157–50	.SHIM, RING GEAR(T=0.50MM)	1	1	1			UR

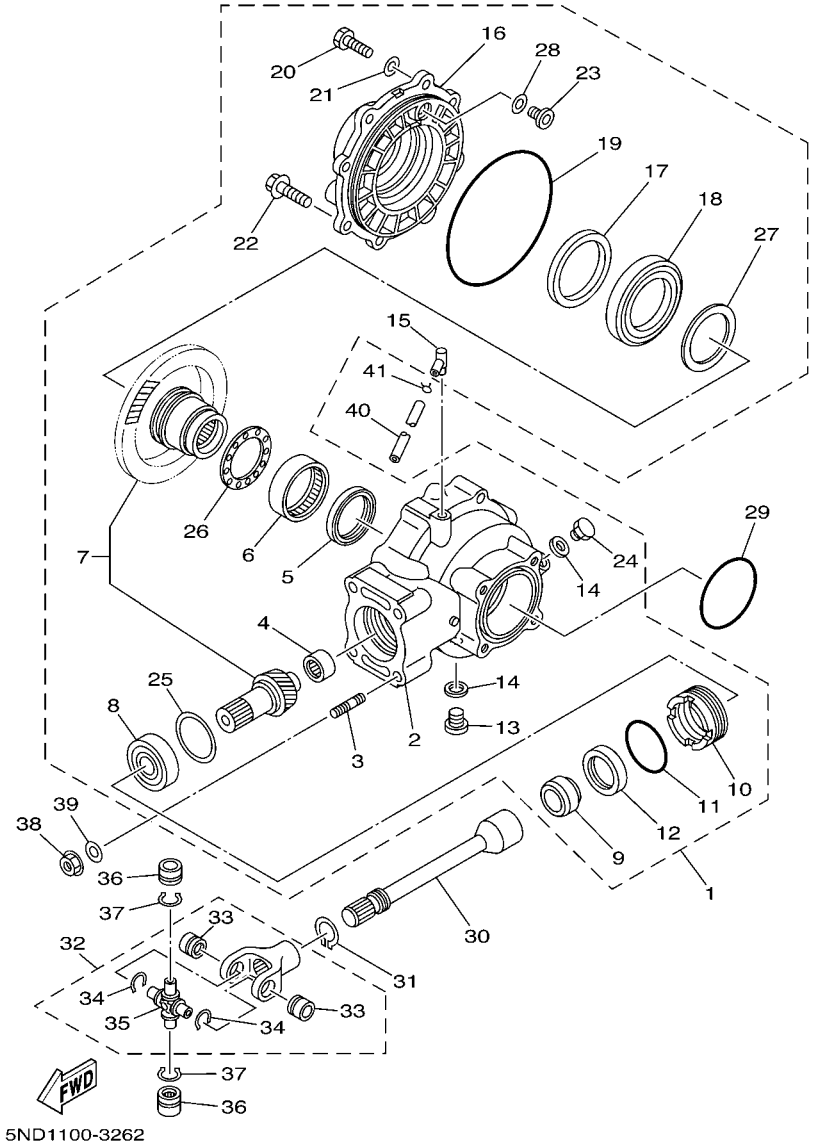

FIG. 25 DRIVE SHAFT

REF. NO.	PART NO.	DESCRIPTION	USA	CAN	EUR			REMARKS
29	93210–76800	O-RING	1	1	1			
30	5ND–G6172–10	SHAFT, DRIVE	1	1	1			
31	93410–22039	CIRCLIP	1	1	1			
32	3HN–46108–01	CROSS JOINT COMP. 3	1	1	1			
33	93399–99926	.BEARING	2	2	2			
34	93440–20088	.CIRCLIP	2	2	2			
35	2HR–46187–00	.SPIDER	1	1	1			
36	93399–99926	BEARING	2	2	2			
37	93440–20088	CIRCLIP	2	2	2			
38	95702–10500	NUT, WITH WASHER	4	4	4			
39	90201–10036	WASHER, PLATE	4	4	4			
40	90445–07810	HOSE (L1050)	1	1	1			
41	90467–07029	CLIP	1	1	1			

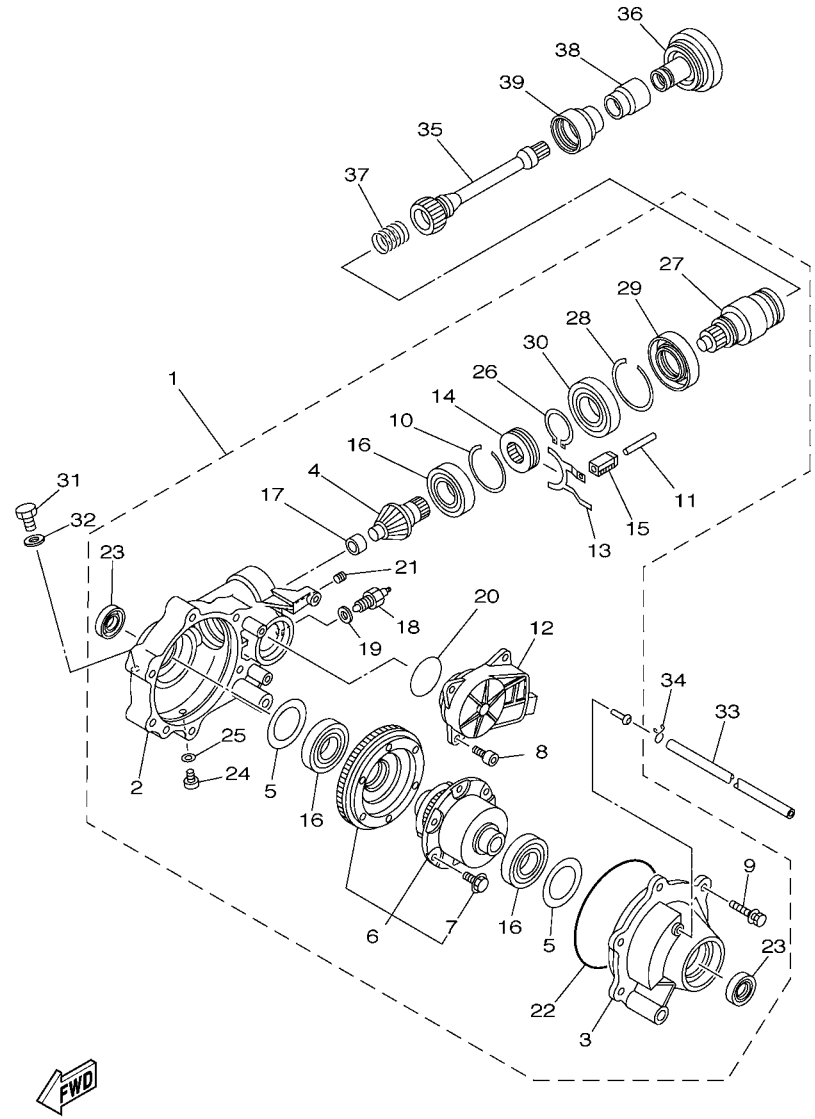

FIG. 26 FRONT DIFFERENTIAL

REF. NO.	PART NO.	DESCRIPTION	USA	CAN	EUR			REMARKS
1	5GH–46160–04	FRONT AXLE GEAR CASE COMP.	1	1	1			
2	5GH–46161–01	.HOUSING, SHAFT DRIVE 2	1	1	1			
3	5GH–46162–01	.HOUSING, BEARING 2	1	1	1			
4	5GH–46141–01	.PINION, DRIVE 2	1	1	1			
5	4WV–46119–01	.SHIM, THRUST (0.1T)	1	1	1			UR
	4WV–46119–11	.SHIM, THRUST (0.2T)	1	1	1			UR
	4WV–46119–21	.SHIM, THRUST (0.3T)	1	1	1			UR
	4WV–46119–31	.SHIM, THRUST (0.4T)	1	1	1			UR
	4WV–46119–41	.SHIM, THRUST (0.5T)	1	1	1			UR
	4WV–46119–51	.SHIM, THRUST (1.0T)	1	1	1			UR
6	5GH–46470–03	.LIMITED SLIP DIFF. ASSY	1	1	1			
7	4WV–46155–00	..BOLT 1	6	6	6			
8	91317–08020	.BOLT	3	3	3			
9	4WV–46159–00	.BOLT 3	6	6	6			
10	4WV–46143–00	.RING,HOLE SNAP 2	1	1	1			
11	5GH–18318–00	.SHAFT, SHIFTER	1	1	1			
12	5GH–4616A–02	.SERVO MOTOR COMP	1	1	1			
13	5GH–18514–01	.FORK, SHIFT 4	1	1	1			
14	4WV–46441–00	.CLUTCH,DRIVEN	1	1	1			
15	5GH–18319–00	.SHAFT 2	1	1	1			
16	4WV–46165–00	.BEARING 2	3	3	3			
17	4WV–46167–00	.BEARING 4	1	1	1			
18	3GD–82540–11	.NEUTRAL SWITCH ASSY	1	1	1			
19	4WV–46132–00	.GASKET 1	1	1	1			
20	93210–50768	.O-RING	1	1	1			
21	90113–08004	.BOLT, SET	1	1	1			
22	93211–40040	.O-RING	1	1	1			

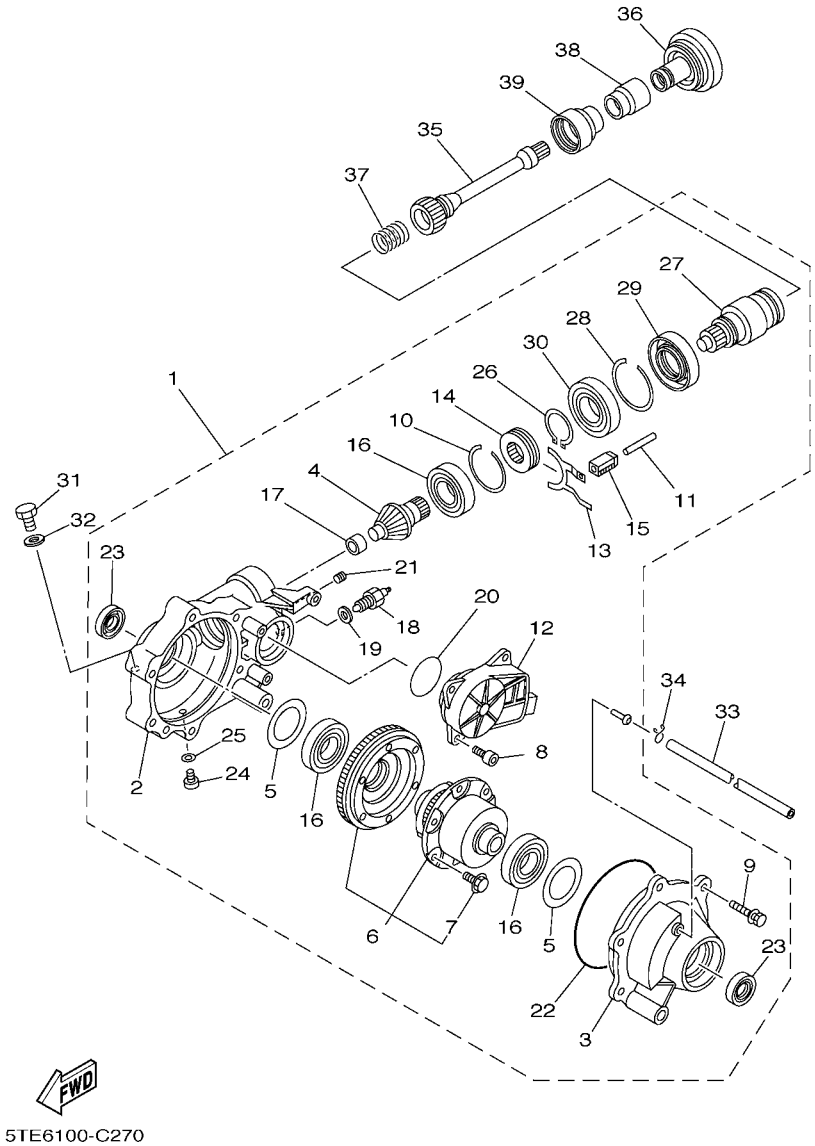

FIG. 26 FRONT DIFFERENTIAL

REF. NO.	PART NO.	DESCRIPTION	USA	CAN	EUR			REMARKS
23	93102–24034	.OIL SEAL	2	2	2			
24	90340–10001	.PLUG, STRAIGHT SCREW	1	1	1			
25	90430–10003	.GASKET	1	1	1			
26	93450–44141	.CIRCLIP	1	1	1			
27	5GH–46126–01	.COUPLING	1	1	1			
28	93450–71142	.CIRCLIP	1	1	1			
29	93102–50030	.OIL SEAL	1	1	1			
30	93316–00801	.BEARING	1	1	1			
31	90340–14029	PLUG, STRAIGHT SCREW	1	1	1			
32	214–11198–01	GASKET	1	1	1			
33	90445–070J5	HOSE (L590)	1	1	1			
34	90467–07029	CLIP	1	1	1			
35	5TE–G6173–10	SHAFT, DRIVE 2	1	1	1			
36	5GH–46123–00	COUPLING, GEAR	1	1	1			
37	90501–296L7	SPRING, COMPRESSION	1	1	1			
38	5GH–46136–00	SEAL 1	1	1	1			
39	5KM–46137–00	SEAL 2	1	1	1			

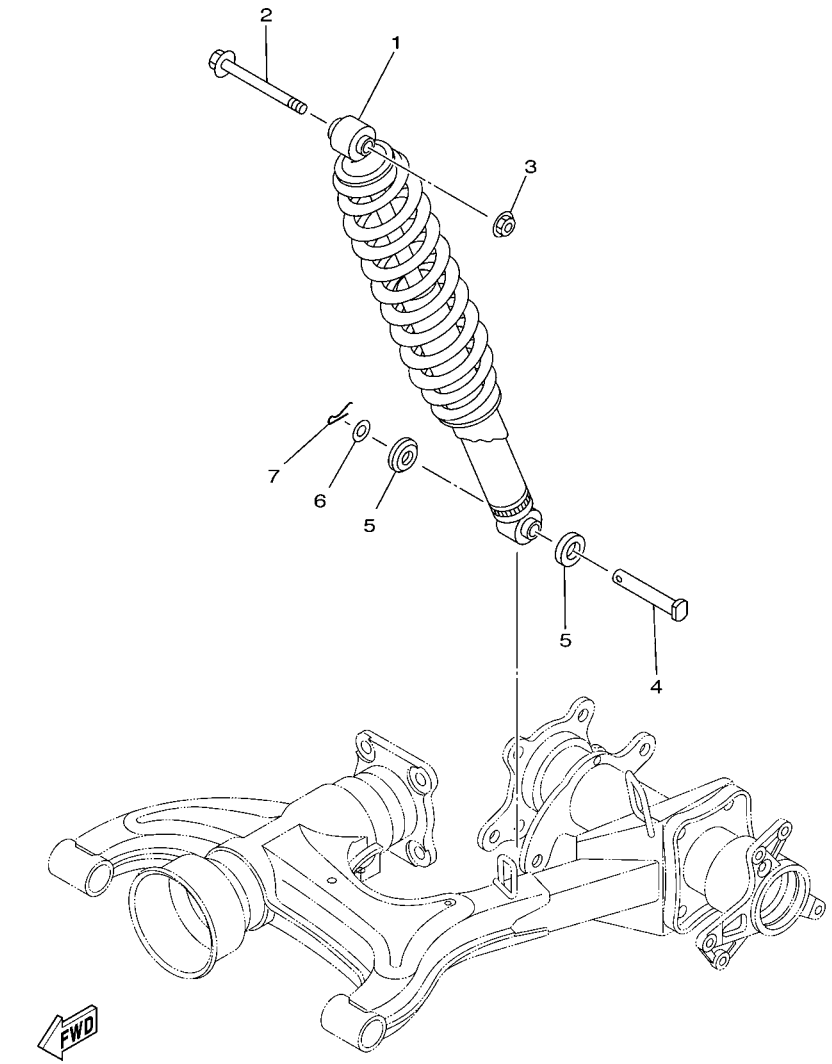

5ND1100-3280

FIG. 27 REAR SUSPENSION

REF. NO.	PART NO.	DESCRIPTION	USA	CAN	EUR			REMARKS
1	3C2–F2210–00	SHOCK ABSORBER ASSY, REAR	1	1	1			UR FOR DPBSE
	3C2–F2210–20	SHOCK ABSORBER ASSY, REAR	1	1	1			UR FOR PGD
2	90105–12803	BOLT, FLANGE	1	1	1			
3	90185–12009	NUT, SELF-LOCKING	1	1	1			
4	90240–12092	PIN, CLEVIS	1	1	1			
5	1W1–22128–00	COVER, THRUST 1	2	2	2			
6	90201–12049	WASHER, PLATE	1	1	1			
7	91402–30025	PIN, COTTER	1	1	1			

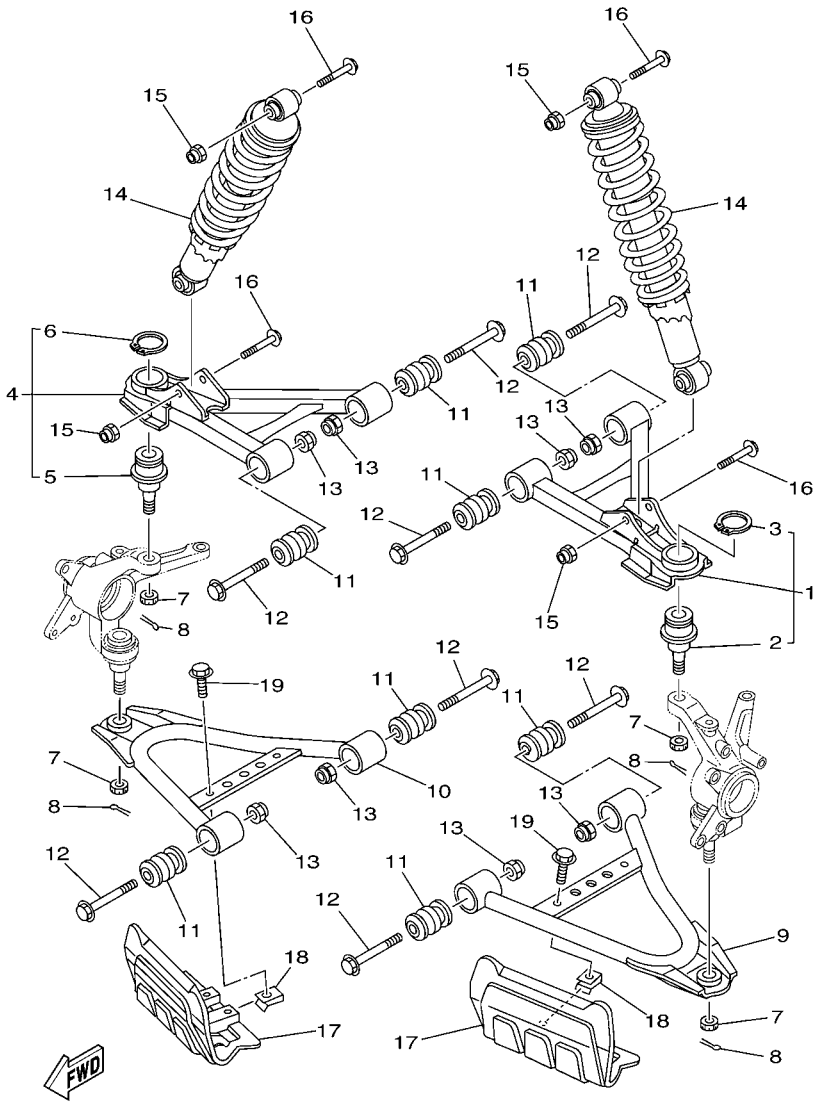

FIG. 28 FRONT SUSPENSION & WHEEL

REF. NO.	PART NO.	DESCRIPTION	USA	CAN	EUR			REMARKS
1	5ND–F3540–12	FRONT UPPER ARM COMP. (LEFT)	1	1	1			
2	5FU–F3549–00	.BALL JOINT 1	1	1	1			
3	99009–32400	.CIRCLIP	1	1	1			
4	5ND–F3550–12	FRONT UPPER ARM COMP. (RIGHT)	1	1	1			
5	5FU–F3549–00	.BALL JOINT 1	1	1	1			
6	99009–32400	.CIRCLIP	1	1	1			
7	90171–12001	NUT, CASTLE	4	4	4			
8	91402–25020	PIN, COTTER	4	4	4			
9	5ND–F357A–01	ARM,FR. LWR. LH.	1	1	1			
10	5ND–F358A–01	ARM,FR. LWR. RH.	1	1	1			
11	2HR–23526–00	BUSH	8	8	8			
12	90105–10267	BOLT, FLANGE	8	8	8			
13	90185–10012	NUT, SELF-LOCKING	8	8	8			
14	3C2–F3350–00	SHOCK ABSORBER ASSY	2	2	2			UR FOR DPBSE
	3C2–F3350–20	SHOCK ABSORBER ASSY	2	2	2			UR FOR PGD
15	90185–10012	NUT, SELF-LOCKING	4	4	4			
16	90105–10841	BOLT, FLANGE	4	4	4			
17	5ND–F3123–00	COVER, LOWER 1	2	2	2			
18	90183–06053	NUT, SPRING	2	2	2			
19	95802–06012	BOLT, FLANGE	2	2	2			

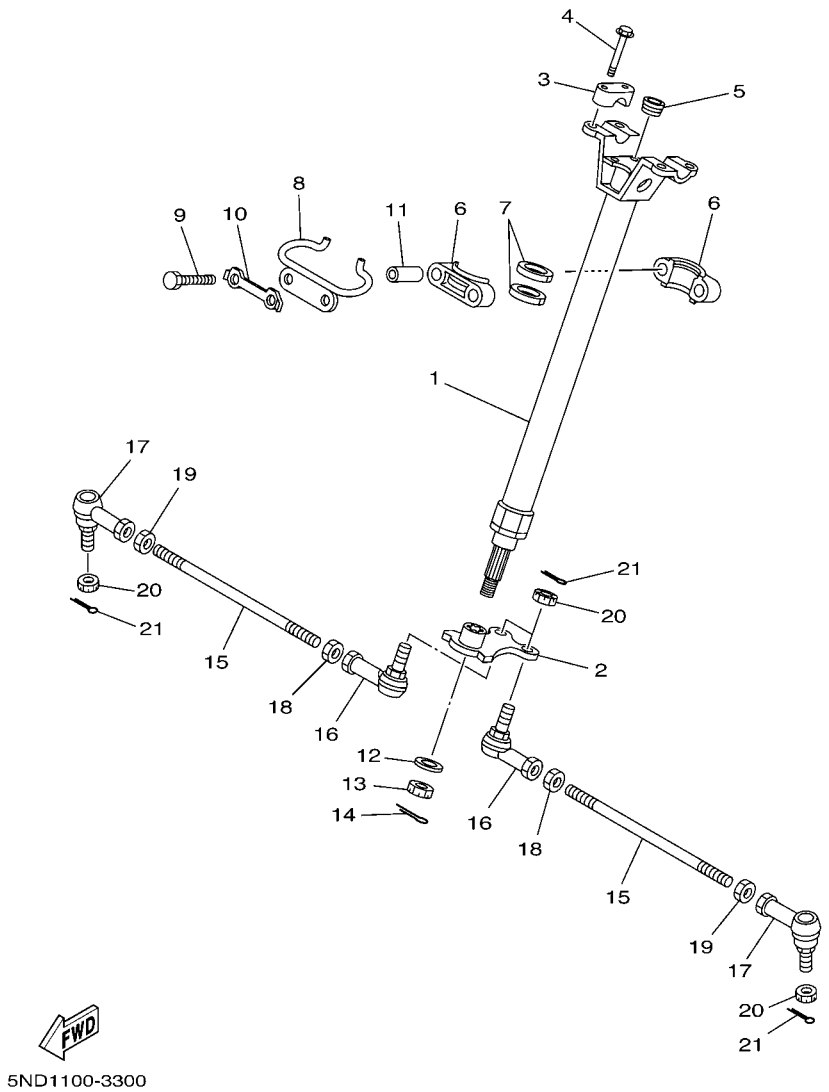

FIG. 29 STEERING

REF. NO.	PART NO.	DESCRIPTION	USA	CAN	EUR			REMARKS
1	3C2–F3813–00	COLUMN, STEERING 2	1	1	1			
2	5ND–F3816–11	ARM, PITMAN	1	1	1			
3	8K1–23814–00	HOLDER, HANDLE	2	2	2			
4	95812–08030	BOLT, FLANGE	4	4	4			
5	90336–28053	PLUG, TAPER	1	1	1			
6	1UY–23812–00	PLANE BEARING, STEERING	2	2	2			
7	93112–31011	OIL SEAL	2	2	2			
8	5ND–F3868–00	BRACKET, STEERING LOWER	1	1	1			
9	97022–08060	BOLT	2	2	2			
10	1UY–23894–01	WASHER, LOCK 1	1	1	1			
11	90387–090R0	COLLAR	2	2	2			
12	90201–14021	WASHER, PLATE	1	1	1			
13	90185–14009	NUT, SELF-LOCKING	1	1	1			
14	91402–20025	PIN, COTTER	1	1	1			
15	5ND–F3831–00	ROD, TIE	2	2	2			
16	1D9–F3841–01	JOINT, UNIVERSAL 1	2	2	2			
17	5ND–F3845–01	JOINT, UNIVERSAL 2	2	2	2			
18	4XE–F3833–00	NUT 1	2	2	2			
19	4XE–F3834–00	NUT 2	2	2	2			
20	90171–12001	NUT, CASTLE	4	4	4			
21	91402–25020	PIN, COTTER	4	4	4			

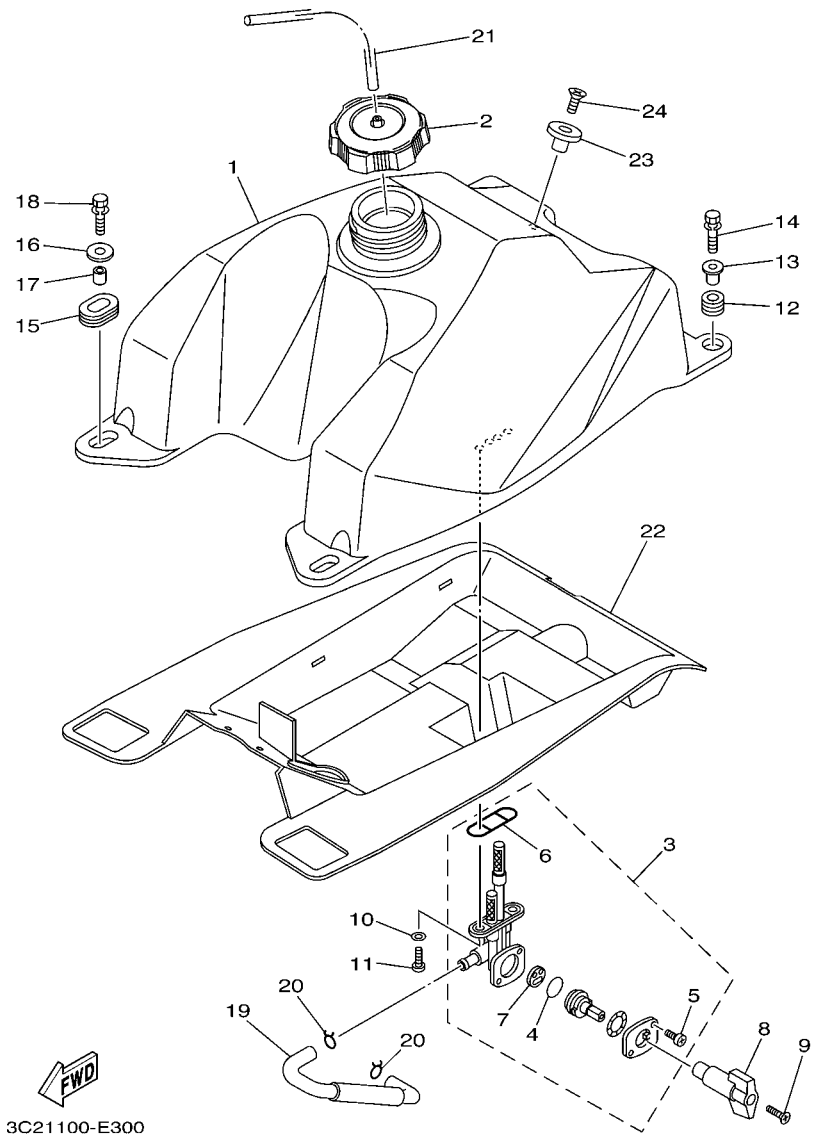

FIG. 30 FUEL TANK

REF. NO.	PART NO.	DESCRIPTION	USA	CAN	EUR			REMARKS
1	3C2–F4110–10	FUEL TANK COMP.	1	1				
	3C2–F4110–00	FUEL TANK COMP.			1			
2	5KM–24610–00	CAP ASSY	1	1	1			
3	3C2–24500–00	FUEL COCK ASSY 1	1	1	1			
4	3AJ–24534–01	.SEAL, COCK	1	1	1			
5	98507–03008	.SCREW, PAN HEAD	2	2	2			
6	4X8–24512–00	.O-RING	1	1	1			
7	3AC–24523–00	.VALVE PACKING	1	1	1			
8	3HE–24524–00	LEVER, COCK	1	1	1			
9	98702–04018	SCREW, FLAT HEAD	1	1	1			
10	90202–05193	WASHER, PLATE	2	2	2			
11	90149–06108	SCREW	2	2	2			
12	90480–18290	GROMMET	2	2	2			
13	90387–066J1	COLLAR	2	2	2			
14	90119–06883	BOLT, WITH WASHER	2	2	2			
15	90480–01400	GROMMET	2	2	2			
16	90201–06090	WASHER, PLATE	2	2	2			
17	90387–07598	COLLAR	2	2	2			
18	90119–06883	BOLT, WITH WASHER	2	2	2			
19	3C2–24311–00	PIPE, FUEL 1	1	1				
	3C2–F4311–00	PIPE, FUEL 1			1			
20	90467–100A1	CLIP	2	2	2			
21	90445–088C5	HOSE (L400)	1	1	1			
22	3C2–F414H–00	DAMPER, PLATE 1	1	1	1			
23	4EW–2412F–00	BRACKET, SEAT	1	1	1			
24	90151–06010	SCREW, COUNTERSUNK	1	1	1			

FIG. 31 SEAT

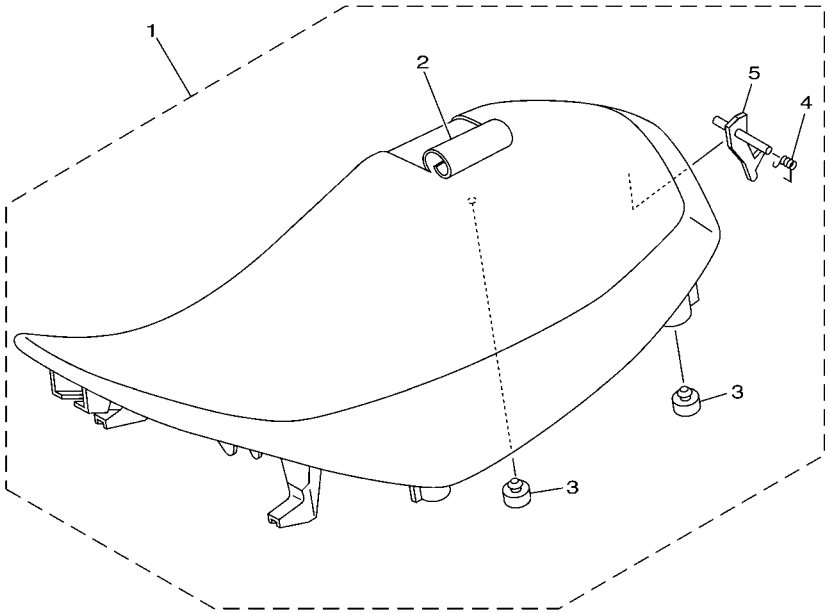

3C21100-E310

REF. NO.	PART NO.	DESCRIPTION	USA	CAN	EUR			REMARKS
1	3C2–F4710–00	SINGLE SEAT ASSY	1	1	1			
2	3C2–F4731–00	.COVER, SEAT	1	1	1			
3	4XE–F4747–00	.DAMPER, SEAT	2	2	2			
4	4XE–F478V–00	.SPRING, TORSION	1	1	1			
5	3C2–F4776–00	.LEVER, SEAT	1	1	1			

FIG. 32 FRONT WHEEL

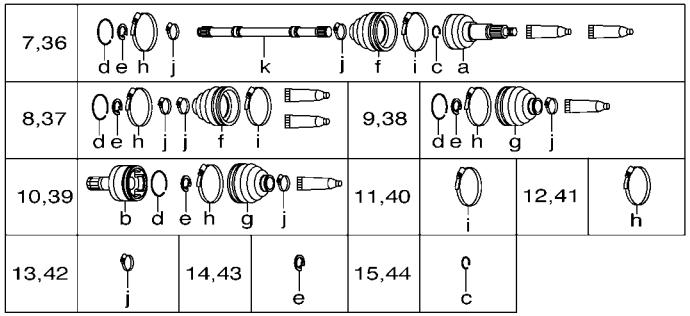

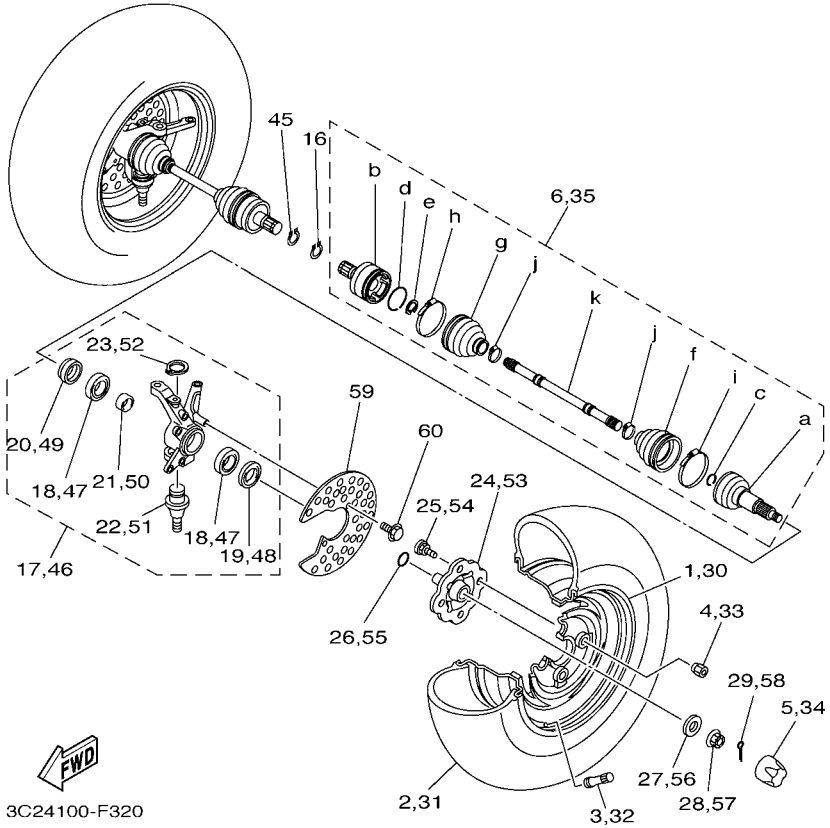

REF. NO.	PART NO.	DESCRIPTION	USA	CAN	EUR			REMARKS
1	3C2–F5180–10	WHEEL COMP.	1	1	1			
2	94108–12806	TIRE (AT23X8R12 M937 TL)	1	1	1			CHENG SHIN
3	93900–00813	VALVE, RIM (TR413)	1	1	1			
4	90179–10020	NUT	4	4	4			
5	5GT–2512A–00	CAP, WHEEL	1	1	1			
6	5TE–F518F–00	DRIVE SHAFT ASSY	1	1	1			
7	5TE–F510F–00	.BALL JOINT SET	1	1	1			
8	5GH–2510G–00	.BOOT SET (BALL JOINT)	1	1	1			
9	3HN–2510H–00	.BOOT SET(DOUBLE OFFSET JOINT)	1	1	1			
10	5GH–2510J–00	.DOUBLE OFF SET JOINT	1	1	1			
11	3HN–2511G–01	.BOOT BAND (BALL JOINT)	1	1	1			
12	3HN–2511H–00	.BOOT BAND(DOUBLE OFFSETJOINT)	1	1	1			
13	3HN–2512G–01	.BOOT BAND (SMALL)	2	2	2			
14	2HR–2512J–00	.SNAP RING	1	1	1			
15	4KB–2512H–00	.CIRCLIP	1	1	1			
16	93450–22119	CIRCLIP	1	1	1			
17	5ND–F3501–10	STEERING KNUCKLE ASSY (LEFT)	1	1	1			
18	93306–006Y2	.BEARING	2	2	2			
19	93106–38046	.OIL SEAL	1	1	1			
20	93106–38047	.OIL SEAL	1	1	1			
21	90560–30325	.SPACER	1	1	1			
22	5FU–F3549–00	.BALL JOINT 1	1	1	1			
23	99009–32400	.CIRCLIP	1	1	1			
24	5ND–F5111–21	HUB, FRONT	1	1	1			
25	90114–10014	BOLT, SERRATION	4	4	4			
26	93210–27666	O-RING	1	1	1			
27	90201–16804	WASHER, PLATE	1	1	1			

FIG. 32 FRONT WHEEL

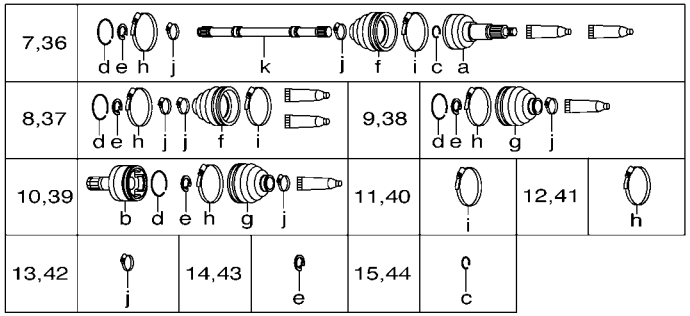

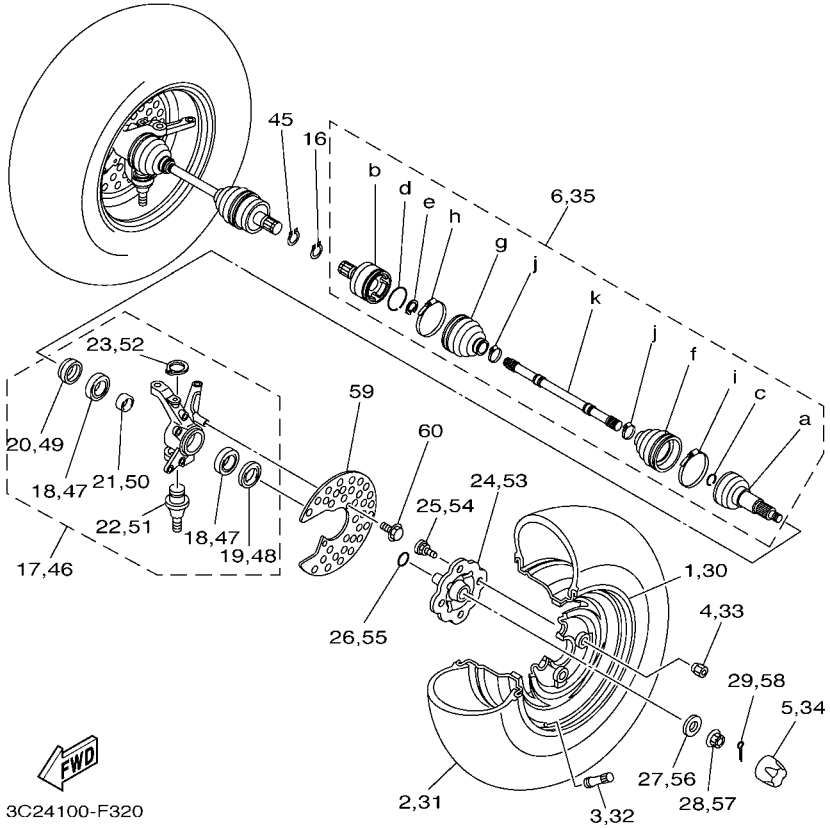

REF. NO.	PART NO.	DESCRIPTION	USA	CAN	EUR			REMARKS
28	90171–16002	NUT, CASTLE	1	1	1			
29	91402–30030	PIN, COTTER	1	1	1			
30	3C2–F5180–10	WHEEL COMP.	1	1	1			
31	94108–12806	TIRE (AT23X8R12 M937 TL)	1	1	1			CHENG SHIN
32	93900–00813	VALVE, RIM (TR413)	1	1	1			
33	90179–10020	NUT	4	4	4			
34	5GT–2512A–00	CAP, WHEEL	1	1	1			
35	5TE–F518F–00	DRIVE SHAFT ASSY	1	1	1			
36	5TE–F510F–00	.BALL JOINT SET	1	1	1			
37	5GH–2510G–00	.BOOT SET (BALL JOINT)	1	1	1			
38	3HN–2510H–00	.BOOT SET(DOUBLE OFFSET JOINT)	1	1	1			
39	5GH–2510J–00	.DOUBLE OFF SET JOINT	1	1	1			
40	3HN–2511G–01	.BOOT BAND (BALL JOINT)	1	1	1			
41	3HN–2511H–00	.BOOT BAND(DOUBLE OFFSETJOINT)	1	1	1			
42	3HN–2512G–01	.BOOT BAND (SMALL)	2	2	2			
43	2HR–2512J–00	.SNAP RING	1	1	1			
44	4KB–2512H–00	.CIRCLIP	1	1	1			
45	93450–22119	CIRCLIP	1	1	1			
46	5ND–F3502–10	STEERING KNUCKLE ASSY (RIGHT)	1	1	1			
47	93306–006Y2	.BEARING	2	2	2			
48	93106–38046	.OIL SEAL	1	1	1			
49	93106–38047	.OIL SEAL	1	1	1			
50	90560–30325	.SPACER	1	1	1			
51	5FU–F3549–00	.BALL JOINT 1	1	1	1			
52	99009–32400	.CIRCLIP	1	1	1			
53	5ND–F5111–21	HUB, FRONT	1	1	1			
54	90114–10014	BOLT, SERRATION	4	4	4			

FIG. 32 FRONT WHEEL

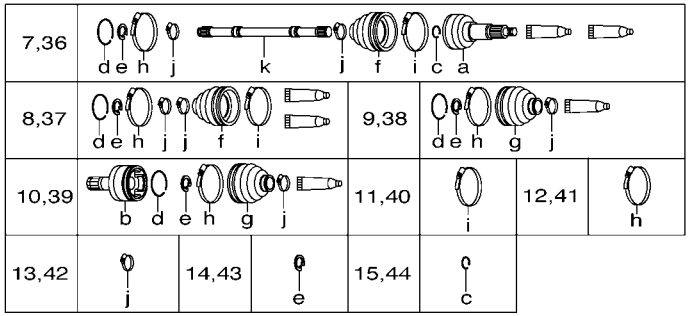

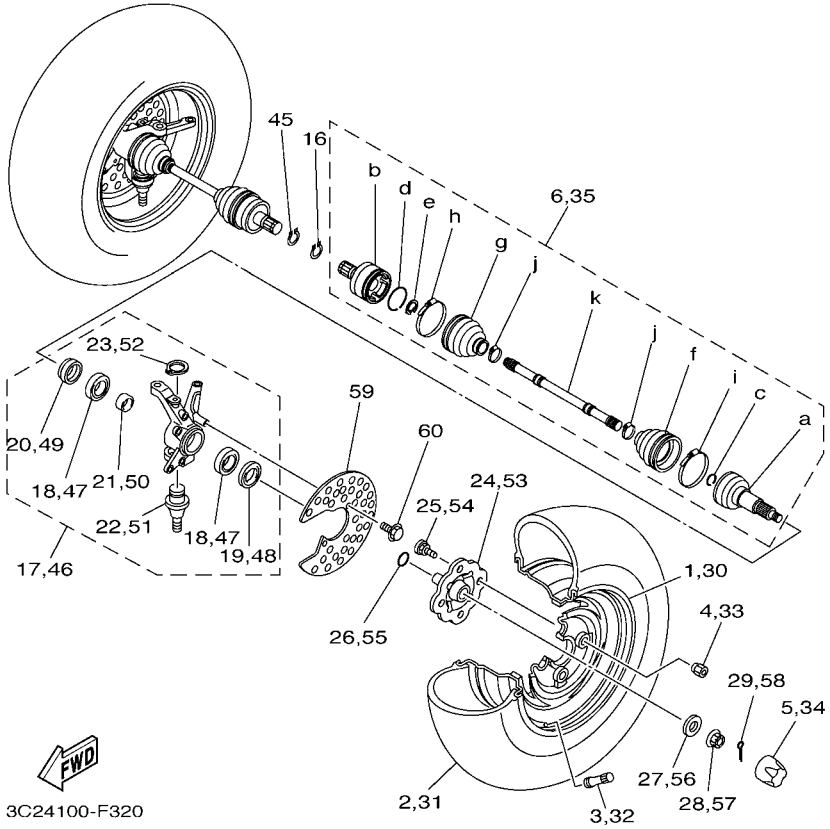

REF. NO.	PART NO.	DESCRIPTION	USA	CAN	EUR			REMARKS
55	93210–27666	O-RING	1	1	1			
56	90201–16804	WASHER, PLATE	1	1	1			
57	90171–16002	NUT, CASTLE	1	1	1			
58	91402–30030	PIN, COTTER	1	1	1			
59	5ND–F514A–00	RING, WHEEL 1	2	2	2			
60	95822–06012	BOLT, FLANGE	4	4	4			

FIG. 33 FRONT BRAKE CALIPER

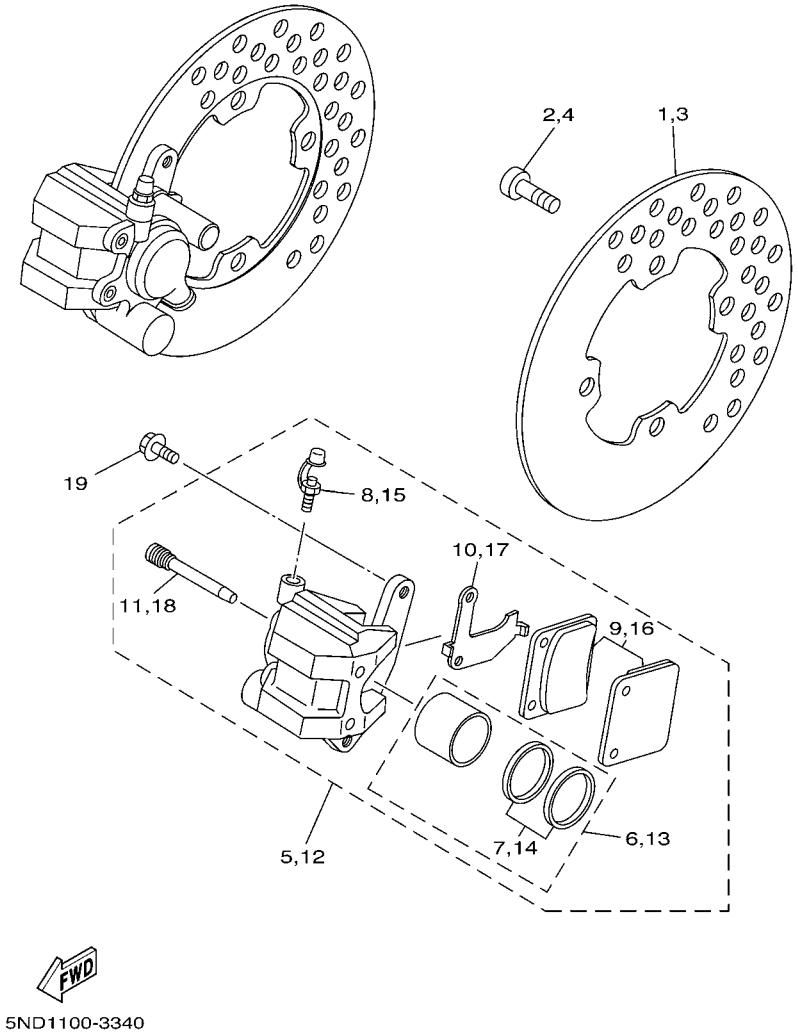

REF. NO.	PART NO.	DESCRIPTION	USA	CAN	EUR			REMARKS
1	5ND–F582T–00	DISC, BRAKE (LEFT)	1	1	1			
2	90109–08082	BOLT	4	4	4			
3	5ND–F582T–00	DISC, BRAKE (LEFT)	1	1	1			
4	90109–08082	BOLT	4	4	4			
5	3GD–2580T–00	CALIPER ASSY (LEFT)	1	1	1			
6	3GD–W0057–00	.PISTON ASSY, CALIPER	1	1	1			
7	3GD–W0047–00	..CALIPER SEAL KIT	1	1	1			
8	1UY–W0048–50	.BLEED SCREW KIT	1	1	1			
9	3GD–W0045–00	.BRAKE PAD KIT	1	1	1			
10	3GD–25827–00	.SHIM, CALIPER	1	1	1			
11	3GD–25933–00	.PIN, PAD	2	2	2			
12	3GD–2580U–00	CALIPER ASSY (RIGHT)	1	1	1			
13	3GD–W0057–00	.PISTON ASSY, CALIPER	1	1	1			
14	3GD–W0047–00	..CALIPER SEAL KIT	1	1	1			
15	1UY–W0048–50	.BLEED SCREW KIT	1	1	1			
16	3GD–W0045–00	.BRAKE PAD KIT	1	1	1			
17	3GD–25828–00	.SHIM, CALIPER	1	1	1			
18	3GD–25933–00	.PIN, PAD	2	2	2			
19	90105–08161	BOLT, FLANGE	4	4	4			

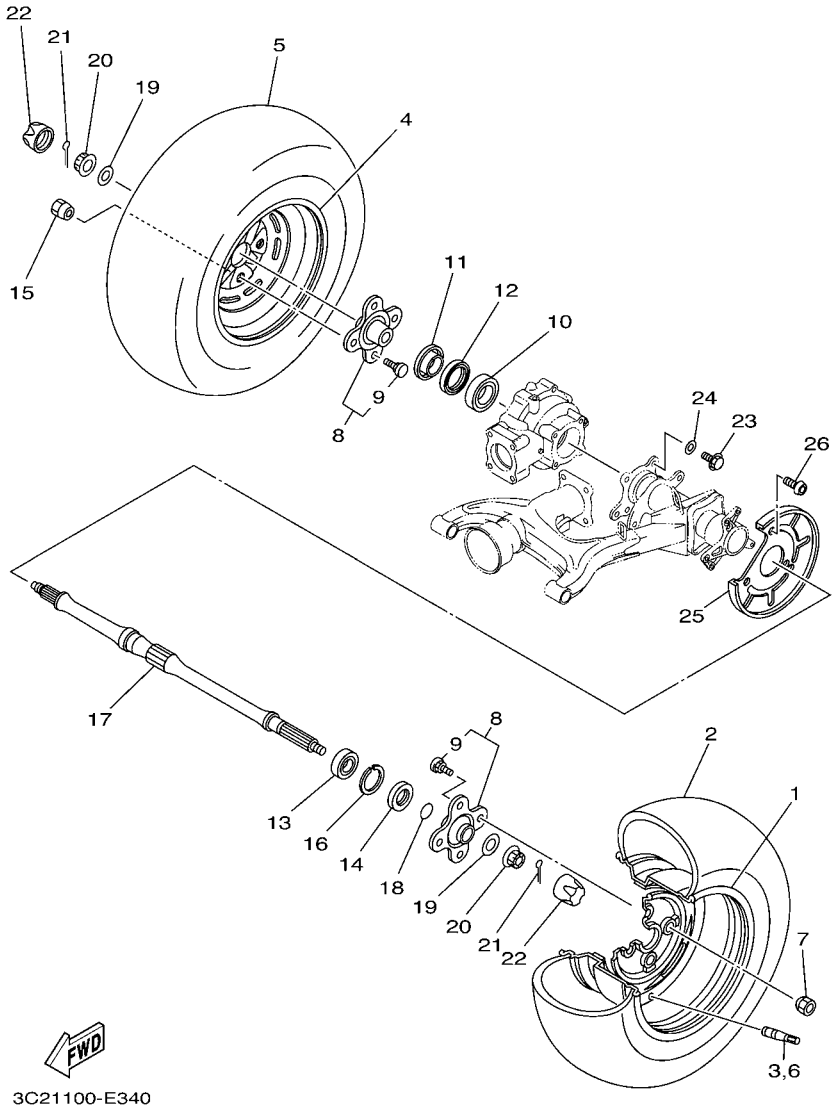

FIG. 34 REAR WHEEL

REF. NO.	PART NO.	DESCRIPTION	USA	CAN	EUR			REMARKS
1	3C2–F5390–10	REAR WHEEL COMP.	1	1	1			
2	94110–12803	TIRE (AT23X10R12 M938 TL)	1	1	1			CHENG SHIN
3	93900–00813	VALVE, RIM (TR413)	1	1	1			
4	3C2–F5390–10	REAR WHEEL COMP.	1	1	1			
5	94110–12803	TIRE (AT23X10R12 M938 TL)	1	1	1			CHENG SHIN
6	93900–00813	VALVE, RIM (TR413)	1	1	1			
7	90179–10020	NUT	4	4	4			
8	5ND–F5383–01	COLLAR, WHEEL	2	2	2			
9	90114–10014	.BOLT, SERRATION	4	4	4			
10	93306–008Y0	BEARING	1	1	1			
11	4SH–25367–01	COVER, HUB DUST	1	1	1			
12	93106–47040	OIL SEAL	1	1	1			
13	93306–006Y2	BEARING	1	1	1			
14	93106–38046	OIL SEAL	1	1	1			
15	90179–10020	NUT	4	4	4			
16	99009–55500	CIRCLIP	1	1	1			
17	5ND–F5381–00	AXLE, WHEEL	1	1	1			
18	93210–27666	O-RING	1	1	1			
19	90201–16804	WASHER, PLATE	2	2	2			
20	90171–16002	NUT, CASTLE	2	2	2			
21	91402–30030	PIN, COTTER	2	2	2			
22	5GT–2512A–00	CAP, WHEEL	2	2	2			
23	90105–10751	BOLT, FLANGE	4	4	4			
24	90201–10035	WASHER, PLATE	4	4	4			
25	5ND–F5718–00	PROTECTOR, DISK BRAKE	1	1	1			
26	92012–06012	BOLT, BUTTON HEAD	3	3	3			

FIG. 35 REAR BRAKE CALIPER

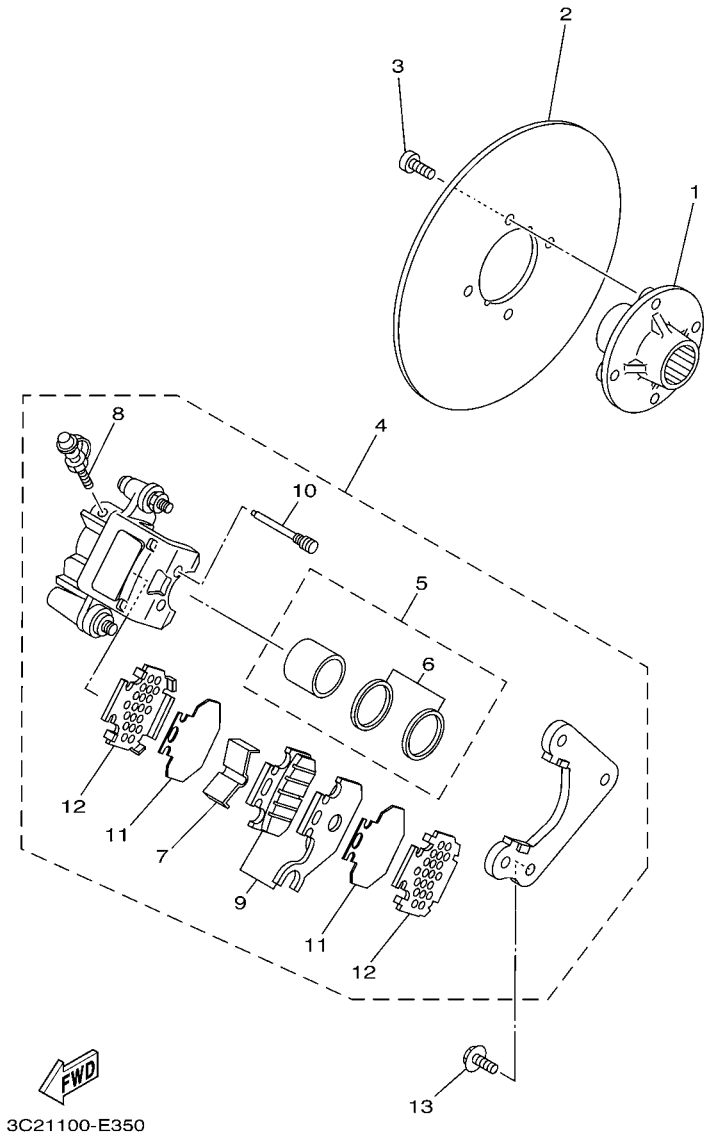

REF. NO.	PART NO.	DESCRIPTION	USA	CAN	EUR			REMARKS
1	5ND–F5712–10	BRACKET, DISC	1	1	1			
2	5ND–F5831–10	DISC, BRAKE (LEFT)	1	1	1			
3	90109–081F0	BOLT	4	4	4			
4	3C2–2580V–00	CALIPER ASSY, REAR 1	1	1	1			
5	3TB–W0057–00	.PISTON ASSY, CALIPER	1	1	1			
6	3GD–W0047–00	..CALIPER SEAL KIT	1	1	1			
7	4GY–25919–50	.SUPPORT, PAD	1	1	1			
8	1UY–W0048–50	.BLEED SCREW KIT	1	1	1			
9	3C2–W0046–00	.BRAKE PAD KIT 2	1	1	1			
10	5GH–25924–00	.PIN, PAD	2	2	2			
11	4GY–22898–50	.INSULATOR, HEAT	2	2	2			
12	5GH–25828–00	.SHIM, CALIPER	2	2	2			
13	90105–08161	BOLT, FLANGE	2	2	2			

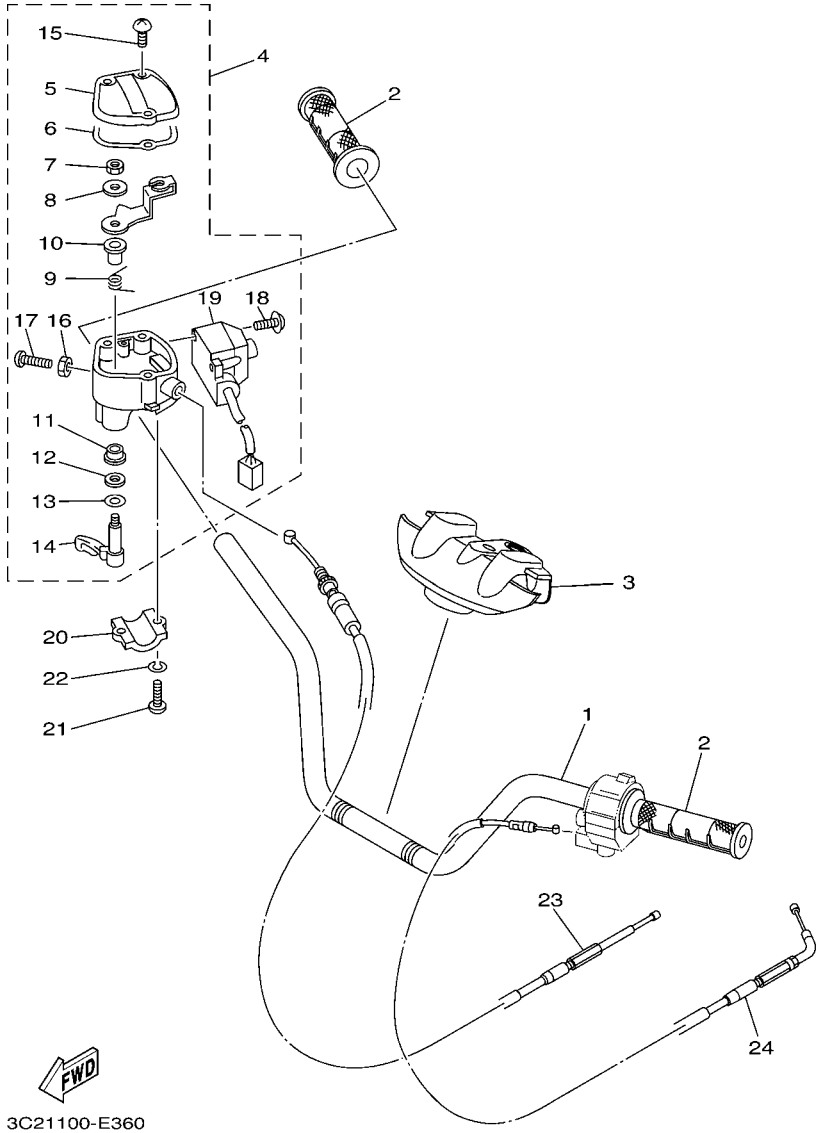

FIG. 36 STEERING HANDLE & CABLE

REF. NO.	PART NO.	DESCRIPTION	USA	CAN	EUR			REMARKS
1	3C2–F6111–00	HANDLEBAR	1	1	1			
2	5FU–F6241–10	GRIP	2	2	2			
3	5ND–F6124–00	PROTECTOR, HANDLEBAR	1	1	1			
4	1P1–26250–00	THROTTLE LEVER ASSY	1	1	1			
5	4KB–2628F–10	.CAP, GEAR	1	1	1			
6	4KB–2628G–00	.GASKET	1	1	1			
7	95607–05100	.NUT, U	1	1	1			
8	1NV–26398–00	.WASHER	1	1	1			
9	1NV–26304–00	.SPRING	1	1	1			
10	1NV–26259–01	.COLLAR	1	1	1			
11	1NV–2625K–00	.COLLAR	1	1	1			
12	93104–09025	.OIL SEAL	1	1	1			
13	1NV–26129–00	.WASHER	1	1	1			
14	1NV–2625G–01	.LEVER, THROTTLE	1	1	1			
15	90149–04278	.SCREW	3	3	3			
16	95307–05700	.NUT	1	1	1			
17	98507–05020	.SCREW, PAN HEAD	1	1	1			
18	97607–04210	.SCREW,WITH WASHER	2	2	2			
19	1P1–83976–00	.SWITCH, HANDLE 1	1	1	1			
20	4V4–82913–00	HOLDER, LEVER LOWER 1	1	1	1			
21	98502–05020	SCREW, PAN HEAD	2	2	2			
22	92902–05600	WASHER, PLATE	2	2	2			
23	5GH–26311–10	CABLE, THROTTLE 1	1	1	1			
24	3C2–F6331–00	CABLE, STARTER 1	1	1	1			

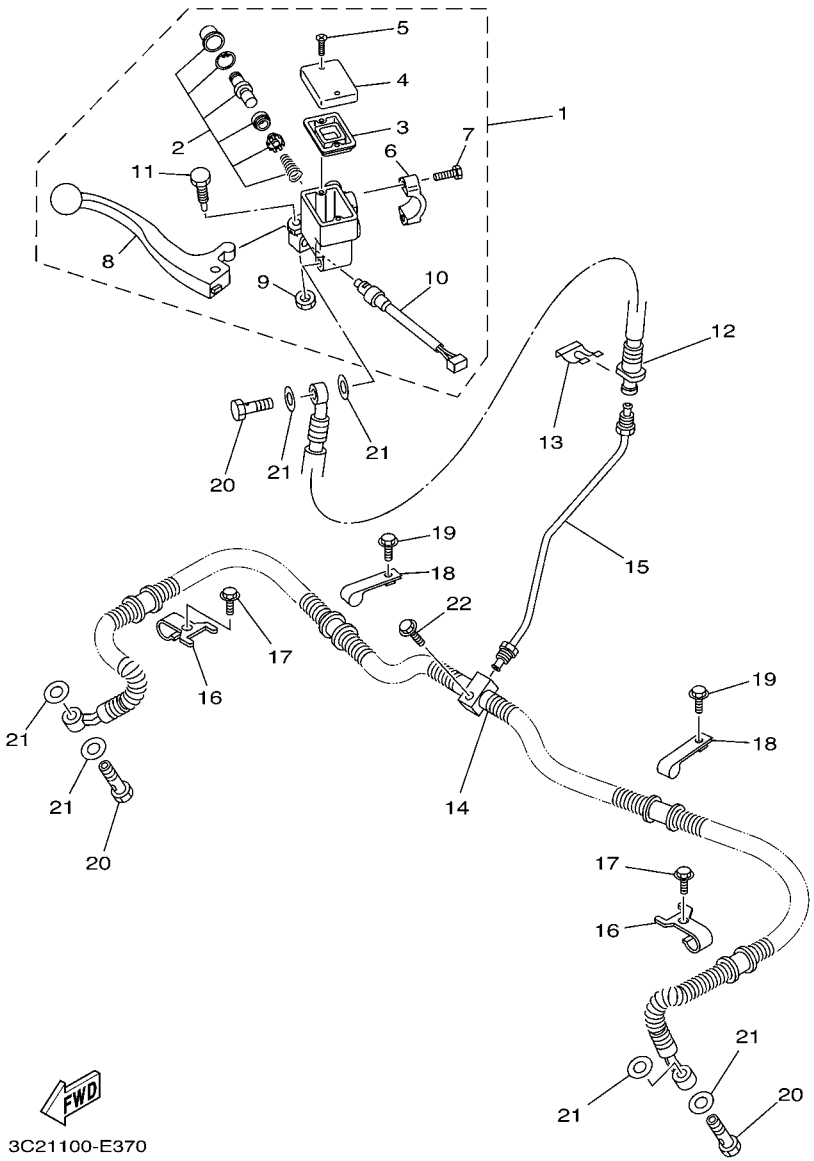

FIG. 37 FRONT MASTER CYLINDER

REF. NO.	PART NO.	DESCRIPTION	USA	CAN	EUR			REMARKS
1	5KM–2583T–01	MASTER CYLINDER ASSY	1	1	1			
2	8CR–W0041–00	.CYLINDER KIT, MASTER	1	1	1			
3	4L0–25854–00	.DIAPHRAGM, RESERVOIR	1	1	1			
4	5JX–25852–01	.CAP, RESERVOIR	1	1	1			
5	98706–04012	.SCREW, FLAT HEAD	2	2	2			
6	5GH–25867–00	.BRACKET, MASTER CYLINDER	1	1	1			
7	5EB–26332–00	.BOLT	2	2	2			
8	5KM–83922–00	.LEVER 2	1	1	1			
9	95606–06100	.NUT, U	1	1	1			
10	5LP–83980–00	.FRONT STOP SWITCH ASSY	1	1	1			
11	1FK–2589F–00	.BOLT, LEVER	1	1	1			
12	3C2–F5872–01	HOSE, BRAKE 1	1	1	1			
13	2GU–25866–00	CIRCLIP	1	1	1			
14	5ND–F5873–01	HOSE, BRAKE 2	1	1	1			
15	5ND–F5871–00	PIPE, BRAKE	1	1	1			
16	5ND–F5875–01	HOLDER, BRAKE HOSE 1	2	2	2			
17	95822–06012	BOLT, FLANGE	2	2	2			
18	5ND–F3192–01	BAND	2	2	2			
19	95822–06012	BOLT, FLANGE	2	2	2			
20	90401–10015	BOLT, UNION	3	3	3			
21	90201–10118	WASHER, PLATE	6	6	6			
22	95802–06025	BOLT, FLANGE	1	1	1			

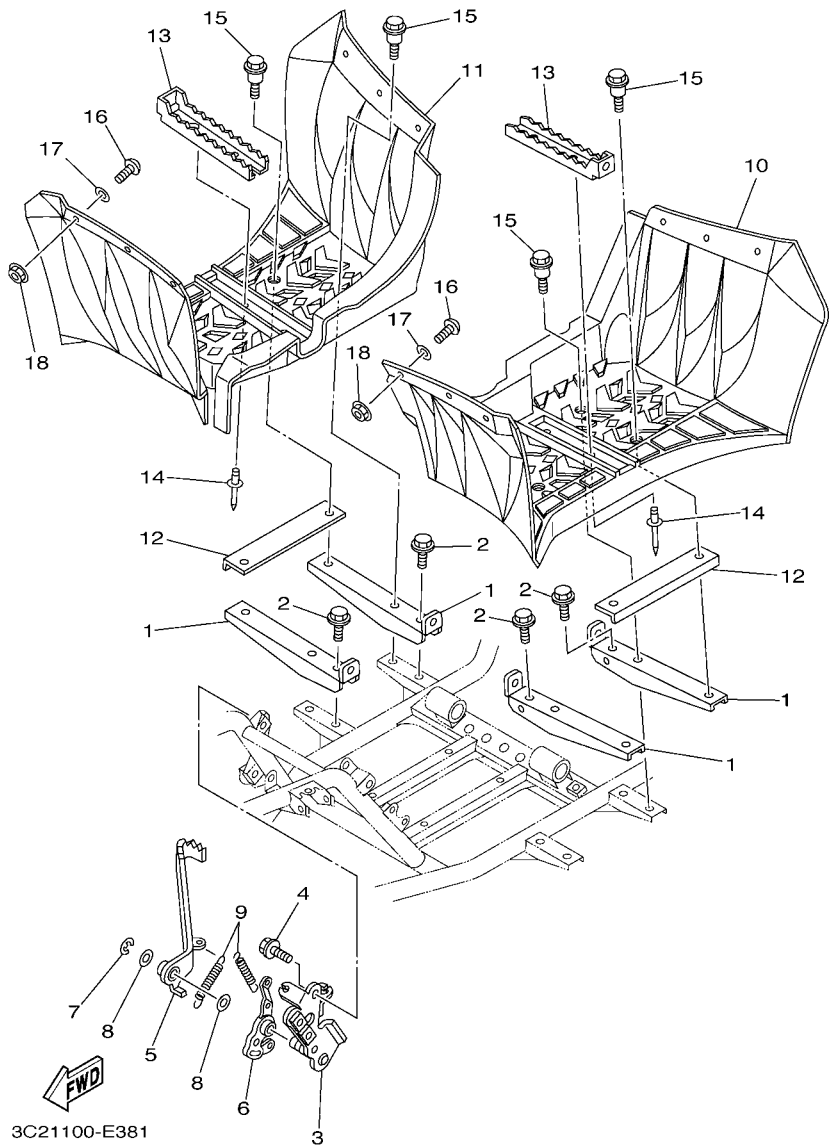

FIG. 38 STAND & FOOTREST

REF. NO.	PART NO.	DESCRIPTION	USA	CAN	EUR			REMARKS
1	3C2–F7471–00	BAR, FOOTREST 1	4	4	4			
2	95812–08012	BOLT, FLANGE	4	4	4			
3	5ND–F7412–10	BRACKET, FOOTREST 1	1	1	1			
4	95812–08012	BOLT, FLANGE	2	2	2			
5	5ND–F7211–00	PEDAL, BRAKE	1	1	1			
6	5ND–F7252–10	LEVER, BRAKE PEDAL	1	1	1			
7	93430–10015	CIRCLIP	1	1	1			
8	90201–14023	WASHER, PLATE	2	2	2			
9	90506–12441	SPRING, TENSION	2	2	2			
10	3C2–F7453–00	COVER 1	1	1	1			
11	3C2–F7463–00	COVER 2	1	1	1			
12	5ND–F7445–00	PLATE 1	2	2	2			
13	3C2–F741A–00	ARM 1	2	2	2			
14	90267–489U9	RIVET, BLIND	4	4	4			
15	90109–06072	BOLT	8	8	8			
16	90149–05299	SCREW	12	12	12			
17	90201–05042	WASHER, PLATE	12	12	12			
18	95702–05300	NUT, NYLON	12	12	12			

FIG. 39 REAR MASTER CYLINDER

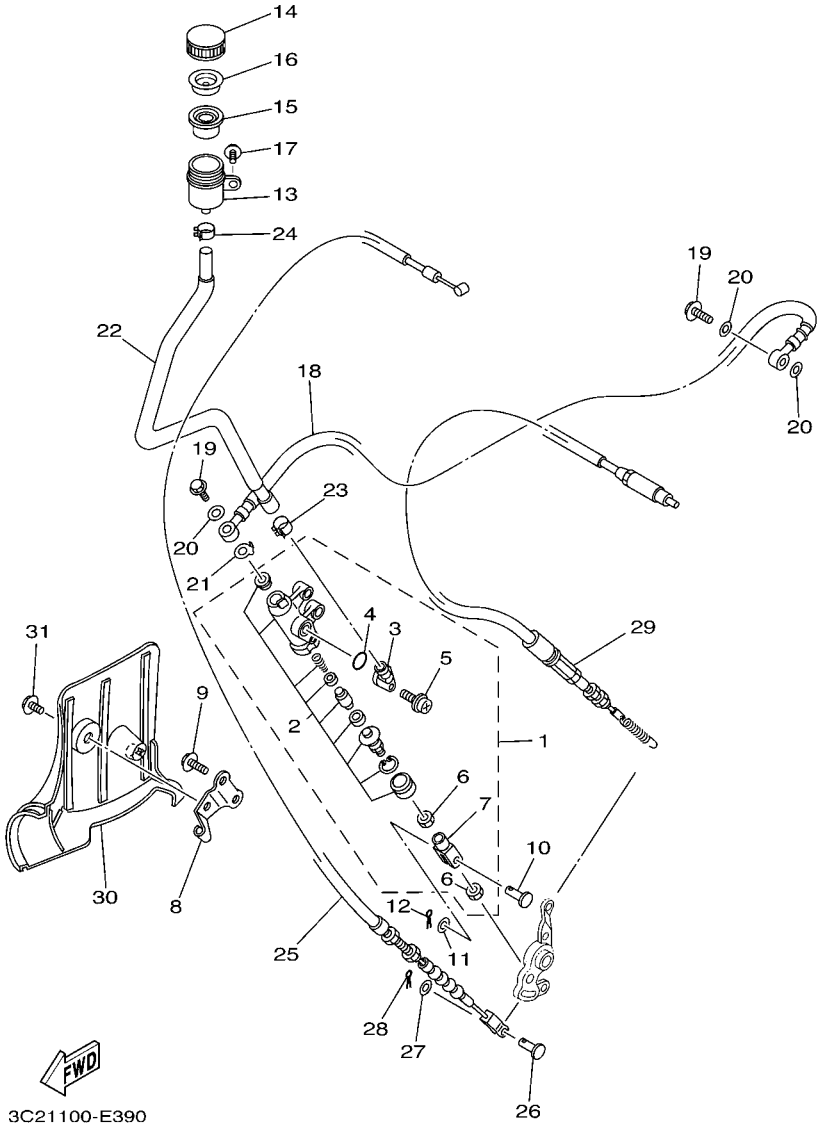

REF. NO.	PART NO.	DESCRIPTION	USA	CAN	EUR			REMARKS
1	5KM–2583V–00	RR. MASTER CYLINDER ASSY.	1	1	1			
2	5KM–W0042–50	.CYLINDER KIT, MASTER	1	1	1			
3	31A–2582A–50	.JOINT	1	1	1			
4	93210–15620	.O-RING	1	1	1			
5	3GM–2589H–00	.SCREW	1	1	1			
6	4SS–27218–00	.NUT	2	2	2			
7	2YK–27222–00	.JOINT	1	1	1			
8	5ND–F637G–00	HOLDER, WIRE	1	1	1			
9	95812–08025	BOLT, FLANGE	2	2	2			
10	90240–08013	PIN, CLEVIS	1	1	1			
11	90201–08066	WASHER, PLATE	1	1	1			
12	91402–16012	PIN, COTTER	1	1	1			
13	2VN–25894–00	TANK, RESERVOIR	1	1	1			
14	4PX–25852–00	CAP, RESERVOIR	1	1	1			
15	2VN–25854–00	DIAPHRAGM, RESERVOIR	1	1	1			
16	2VN–25855–00	BUSH,DIAPHRAGM	1	1	1			
17	90105–06048	BOLT, FLANGE	1	1	1			
18	5ND–F5874–01	HOSE, BRAKE	1	1	1			
19	90401–10015	BOLT, UNION	2	2	2			
20	90201–10118	WASHER, PLATE	3	3	3			
21	5GH–25844–00	WASHER, LOCK	1	1	1			
22	3C2–F5895–00	HOSE, RESERVOIR	1	1	1			
23	90467–140A5	CLIP	1	1	1			
24	90467–11044	CLIP	1	1	1			
25	3C2–26341–10	WIRE, BRAKE 1	1	1	1			
26	90240–06076	PIN, CLEVIS	1	1	1			
27	90201–06042	WASHER, PLATE	1	1	1			

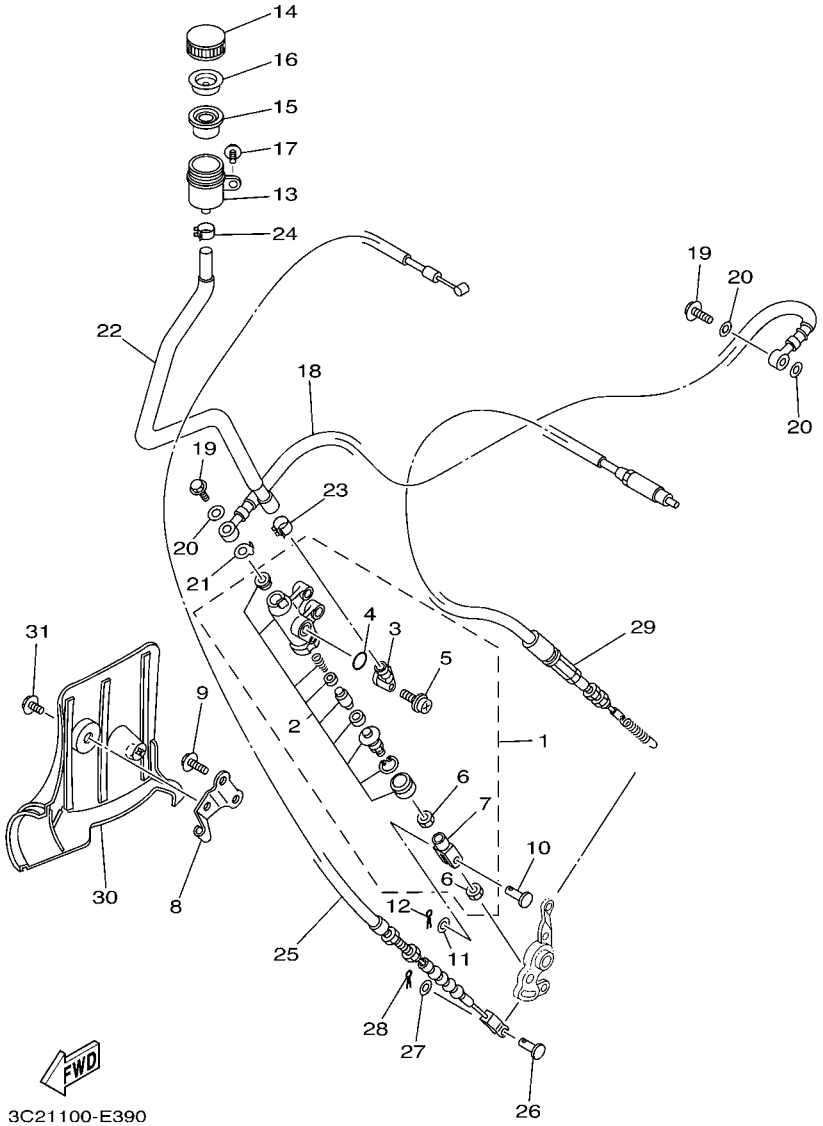

FIG. 39 REAR MASTER CYLINDER

REF. NO.	PART NO.	DESCRIPTION	USA	CAN	EUR			REMARKS
28	91402–20012	PIN, COTTER	1	1	1			
29	5GH–2637F–10	CABLE, CONTROL 2	1	1	1			
30	5ND–F7491–00	PROTECTOR	1	1	1			
31	95822–06012	BOLT, FLANGE	1	1	1			

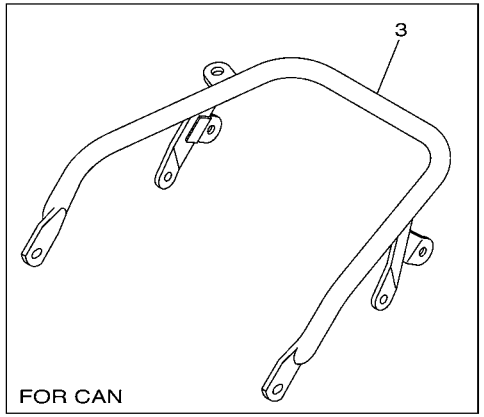

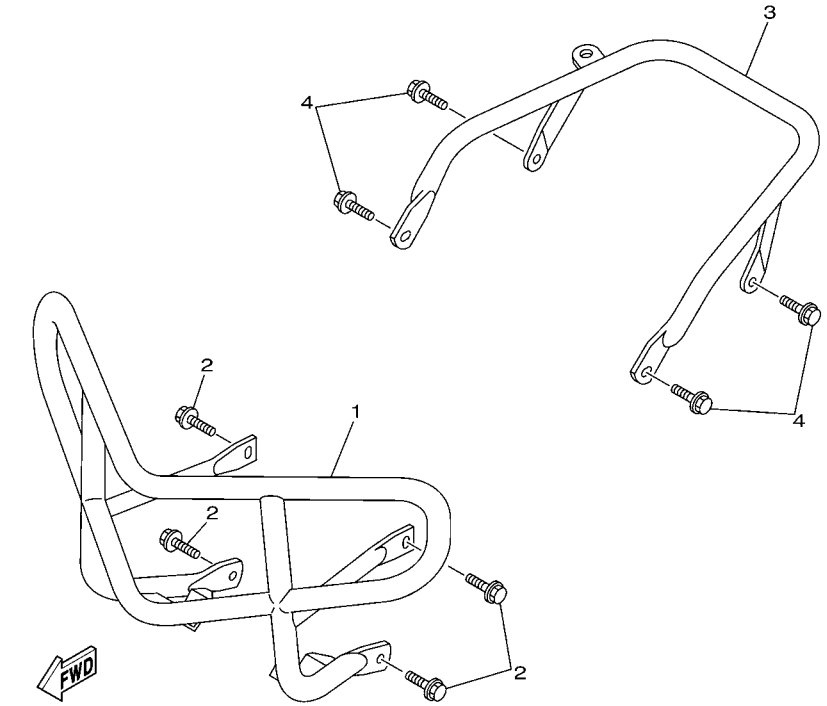

3C21100-E400

FIG. 40 GUARD

REF. NO.	PART NO.	DESCRIPTION	USA	CAN	EUR			REMARKS
1	3C2–F845N–10	BAR, CARRY FRONT	1	1	1			
2	95812–08012	BOLT, FLANGE	4	4	4			
3	3C2–F845R–20	BAR, CARRY REAR	1		1			
	3C2–F845R–30	BAR, CARRY REAR		1				
4	95812–08012	BOLT, FLANGE	4	4	4			

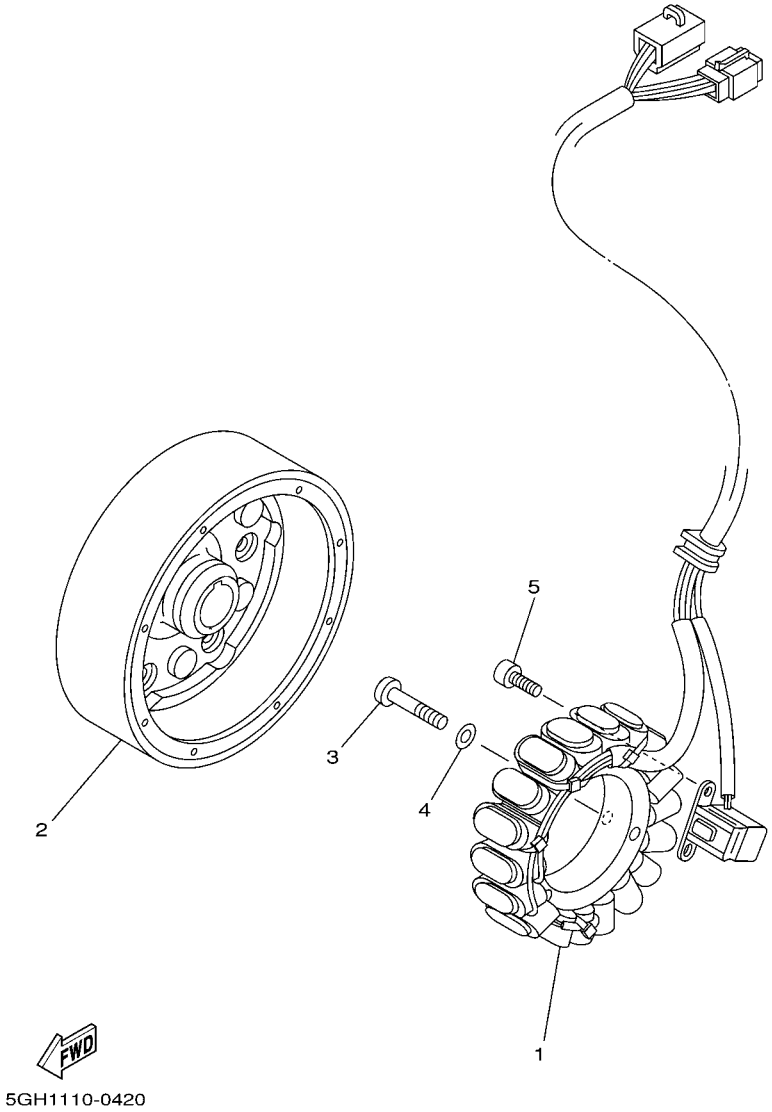

FIG. 41 GENERATOR

REF. NO.	PART NO.	DESCRIPTION	USA	CAN	EUR			REMARKS
1	5ND–81410–00	STATOR ASSY	1	1	1			
2	5GH–81450–01	ROTOR ASSY	1	1	1			
3	92502–06030	SCREW, PAN HEAD	3	3	3			
4	92902–06600	WASHER, PLATE	3	3	3			
5	91312–05012	BOLT	2	2	2			

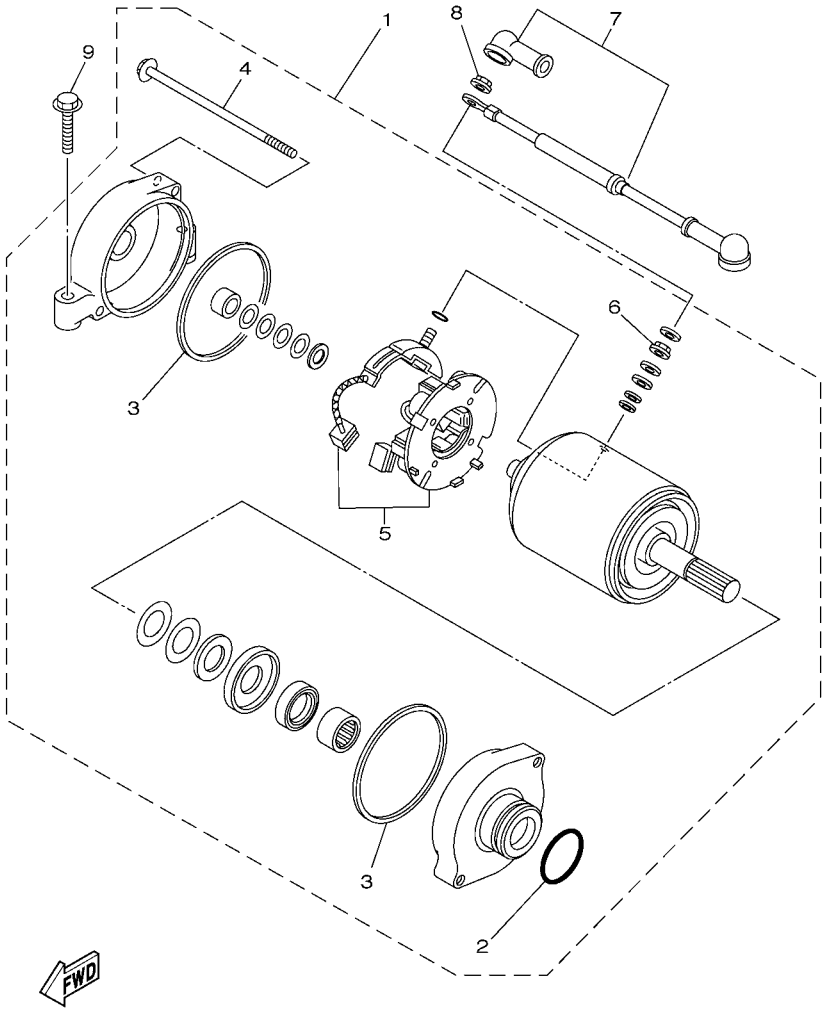

5ND6100-C440

FIG. 42 STARTING MOTOR

REF. NO.	PART NO.	DESCRIPTION	USA	CAN	EUR			REMARKS
1	5KM–81890–00	MOTOR ASSY	1	1	1			
2	1FK–81847–00	.O-RING	1	1	1			
3	11H–81844–00	.GASKET	2	2	2			
4	3AJ–81826–00	.BOLT	2	2	2			
5	3AJ–81801–00	.BRUSH SET	1	1	1			
6	4XV–8182A–00	.NUT	1	1	1			
7	5ND–81815–01	CORD, STARTER MOTOR	1	1	1			
8	4XV–8182A–00	NUT	1	1	1			
9	95022–06030	BOLT, FLANGE	2	2	2			

FIG. 43 METER

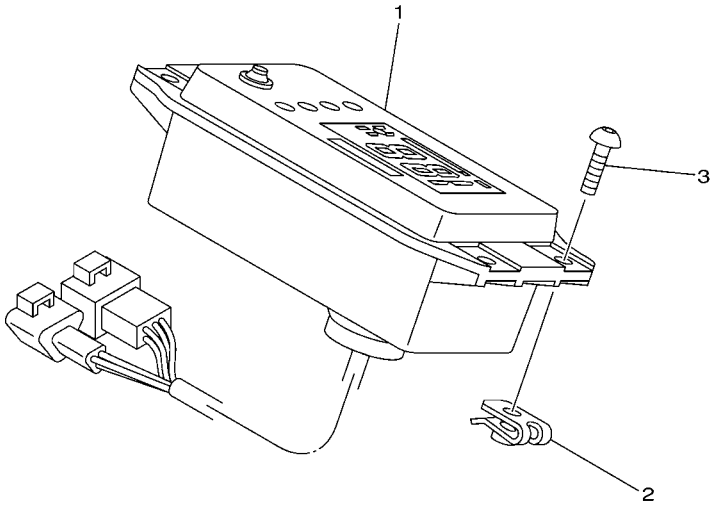

3C21100-E430

REF. NO.	PART NO.	DESCRIPTION	USA	CAN	EUR			REMARKS
1	3C2–83500–00	METER ASSY	1					MILE/H
	3C2–83500–10	METER ASSY		1	1			KM/H
2	90183–050A0	NUT, SPRING	4	4	4			
3	92014–05014	BOLT, BUTTON HEAD	4	4	4			

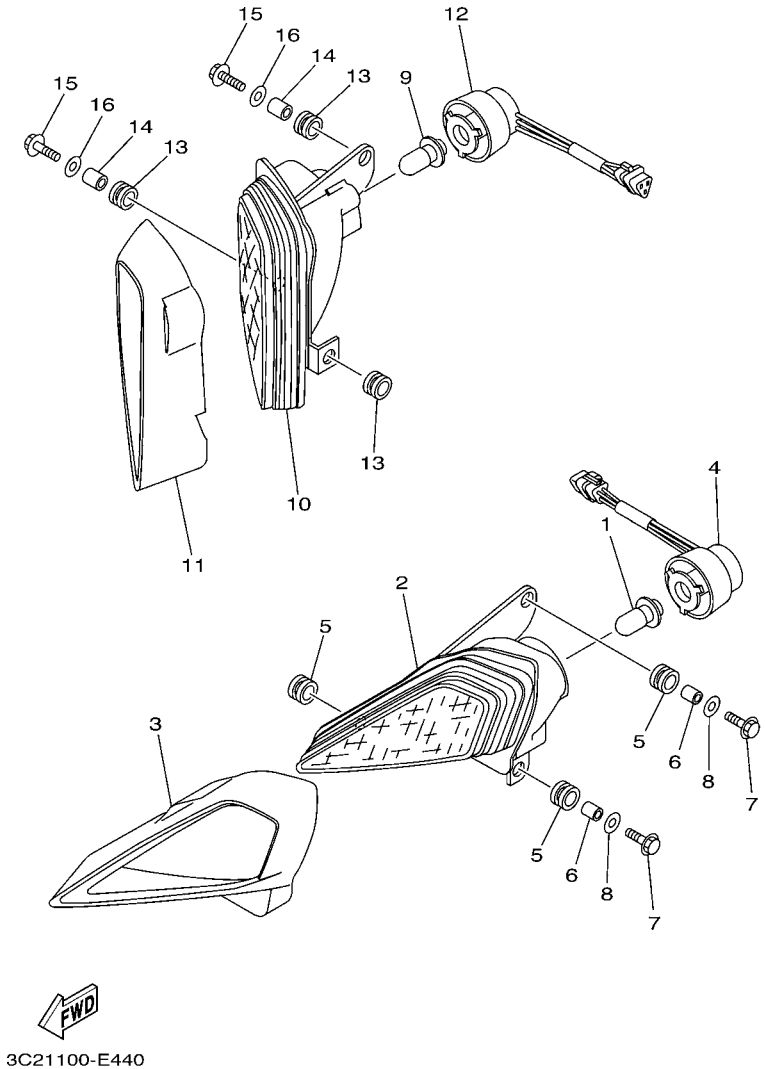

FIG. 44 HEADLIGHT

REF. NO.	PART NO.	DESCRIPTION	USA	CAN	EUR			REMARKS
1	4KB–84314–01	BULB (12V-30/30W)	1	1	1			
2	5TG–84110–03	HEADLIGHT UNIT ASSY	1	1	1			
3	5TG–84165–01	RIM, HEADLIGHT COVER 1	1	1	1			
4	5TG–84140–01	SOCKET CORD ASSY	1	1	1			
5	90480–14102	GROMMET	3	3	3			
6	90387–07598	COLLAR	2	2	2			
7	90101–06053	BOLT	2	2	2			
8	90201–06078	WASHER, PLATE	2	2	2			
9	4KB–84314–01	BULB (12V-30/30W)	1	1	1			
10	5TG–84310–03	HEADLIGHT UNIT ASSY	1	1	1			
11	5TG–84166–01	RIM, HEADLIGHT COVER 2	1	1	1			
12	5TG–84340–01	SOCKET CORD ASSY 1	1	1	1			
13	90480–14102	GROMMET	3	3	3			
14	90387–07598	COLLAR	2	2	2			
15	90101–06053	BOLT	2	2	2			
16	90201–06078	WASHER, PLATE	2	2	2			

FIG. 45 TAILLIGHT

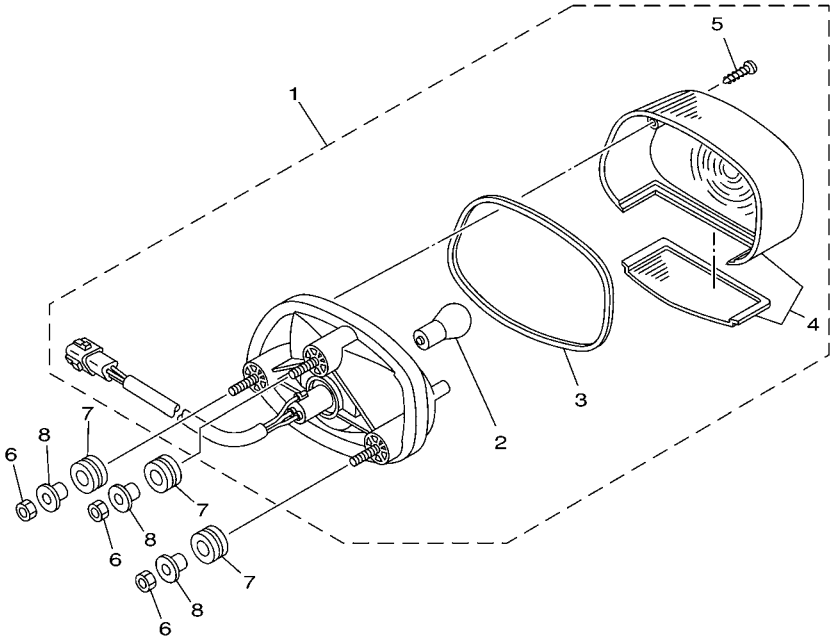

REF. NO.	PART NO.	DESCRIPTION	USA	CAN	EUR			REMARKS
1	5LP–84700–11	TAILLIGHT ASSY	1					
2	256–84714–60	.BULB (12V-21/5W)	1					
3	4TR–84723–00	.GASKET, TAIL LENS	1					
4	4TR–84733–00	.LENS, TAILLIGHT	1					
5	97702–40620	.SCREW, TAPPING	2					
6	95302–06600	NUT	3					
7	90480–14555	GROMMET	3					
8	90387–07391	COLLAR	3					

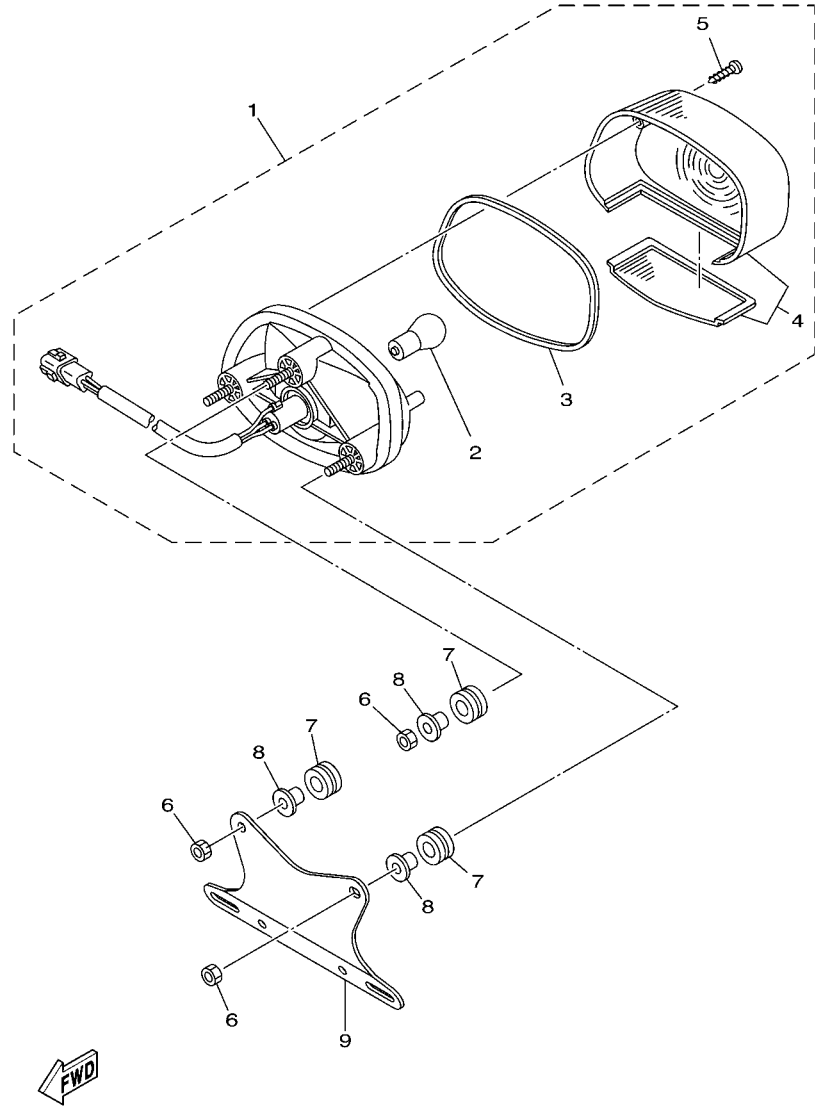

FIG. 46 TAILLIGHT 2

REF. NO.	PART NO.	DESCRIPTION	USA	CAN	EUR			REMARKS
1	5LP–84700–11	TAILLIGHT ASSY		1	1			
2	256–84714–60	.BULB (12V-21/5W)		1	1			
3	4TR–84723–00	.GASKET, TAIL LENS		1	1			
4	4TR–84733–00	.LENS, TAILLIGHT		1	1			
5	97702–40620	.SCREW, TAPPING		2	2			
6	95302–06600	NUT		3	3			
7	90480–14555	GROMMET		3	3			
8	90387–07391	COLLAR		3	3			
9	3C2–H4751–00	BRACKET, LICENSE		1	1			

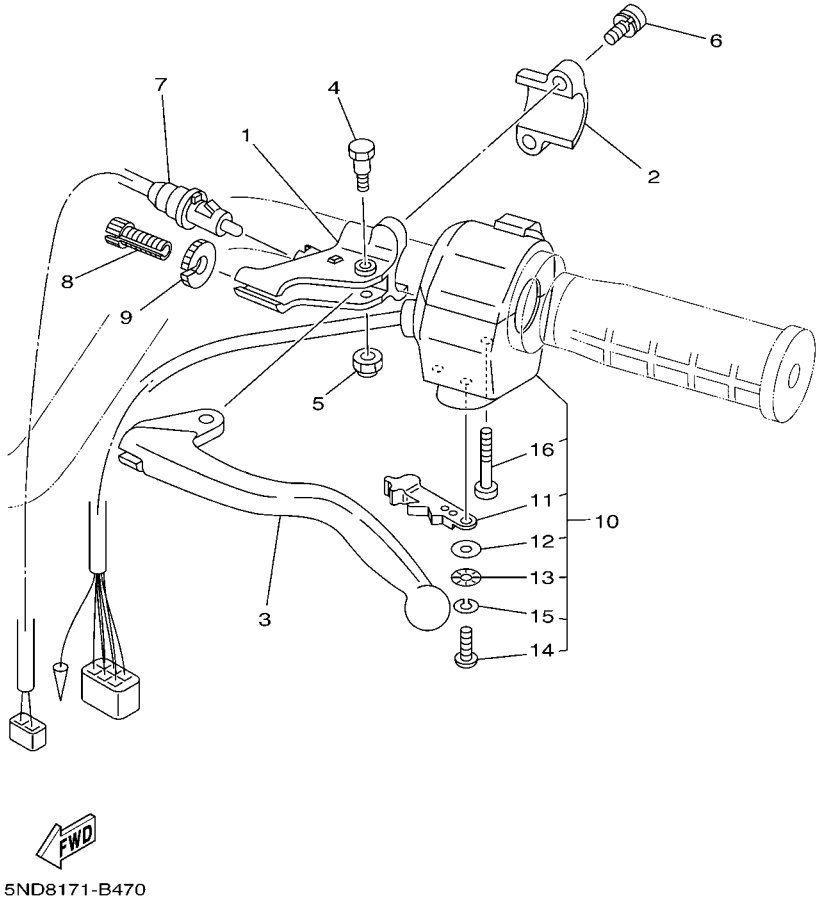

FIG. 47 HANDLE SWITCH & LEVER

REF. NO.	PART NO.	DESCRIPTION	USA	CAN	EUR			REMARKS
1	1YW–82911–02	HOLDER, LEVER 1	1	1	1			
2	2XJ–82913–00	HOLDER, LEVER LOWER 1	1	1	1			
3	2HT–83912–00	LEVER 1	1	1	1			
4	90109–06799	BOLT	1	1	1			
5	95607–06100	NUT, U	1	1	1			
6	97607–06120	SCREW,WITH WASHER	2	2	2			
7	5KM–82917–00	SWITCH	1	1	1			
8	90123–08046	BOLT	1	1	1			
9	90179–08148	NUT	1	1	1			
10	5LP–83973–01	SWITCH, HANDLE 3	1	1	1			
11	5GH–83941–00	.LEVER, STARTER	1	1	1			
12	1UY–83909–00	.WASHER, SPECIAL	1	1	1			
13	3L4–83943–00	.WASHER, STARTER	1	1	1			
14	98517–05012	.SCREW, PAN HEAD	1	1	1			
15	92907–05100	.WASHER, SPRING	1	1	1			
16	98507–05030	.SCREW, PAN HEAD	2	2	2			

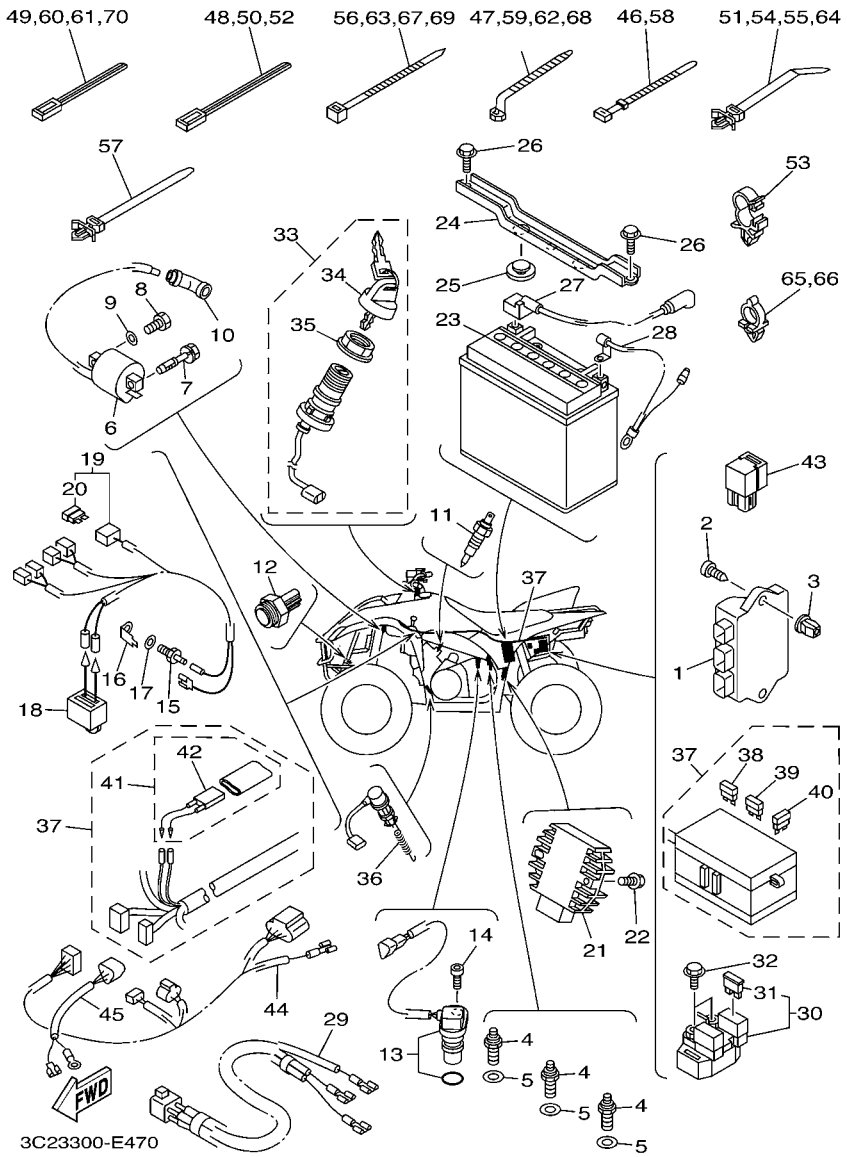

FIG. 48 ELECTRICAL 1

REF. NO.	PART NO.	DESCRIPTION	USA	CAN	EUR			REMARKS
1	3C2–85540–00	C.D.I. UNIT ASSY	1	1	1			
2	97702–60420	SCREW, TAPPING	1	1	1			
3	90338–08226	PLUG	1	1	1			
4	3GB–82540–01	NEUTRAL SWITCH ASSY	3	3	3			
5	90430–10148	GASKET	3	3	3			
6	3KJ–82310–10	IGNITION COIL ASSY	1	1	1			
7	90109–06873	BOLT	1	1	1			
8	97002–06020	BOLT	1	1	1			
9	92902–06600	WASHER, PLATE	1	1	1			
10	1UY–82370–20	PLUG CAP ASSY	1	1	1			
11	5KM–82560–00	THERMO SWITCH ASSY	1	1	1			
12	5ND–82560–10	THERMO SWITCH ASSY	1	1	1			
13	3C2–83755–00	SENSOR, SPEED	1	1	1			
14	90110–06001	BOLT, HEXAGON SOCKET HEAD	1	1	1			
15	5FU–83790–00	HEATER ASSY (15W)			1			AP
16	5FU–82103–00	TERMINAL 1			1			AP
17	90201–08016	WASHER, PLATE			1			AP
18	5FU–82560–20	THERMO SWITCH ASSY			1			AP
19	5ND–82509–00	WIRE, SUB LEAD			1			AP
20	42X–82151–00	.FUSE (10A-BL)			2			
21	5GT–81960–00	RECTIFIER & REGULATOR ASSY	1	1	1			
22	95802–06020	BOLT, FLANGE	2	2	2			
23	5FU–H2100–20	BATTERY ASSY (YUASA YTX20L-BS)	1	1	1			
24	5ND–H2128–01	BRACKET, BATTERY	1	1	1			
25	371–82121–00	PAD, BATTERY	2	2	2			
26	95802–06020	BOLT, FLANGE	2	2	2			
27	3C2–H2115–00	WIRE, PLUS LEAD	1	1	1			

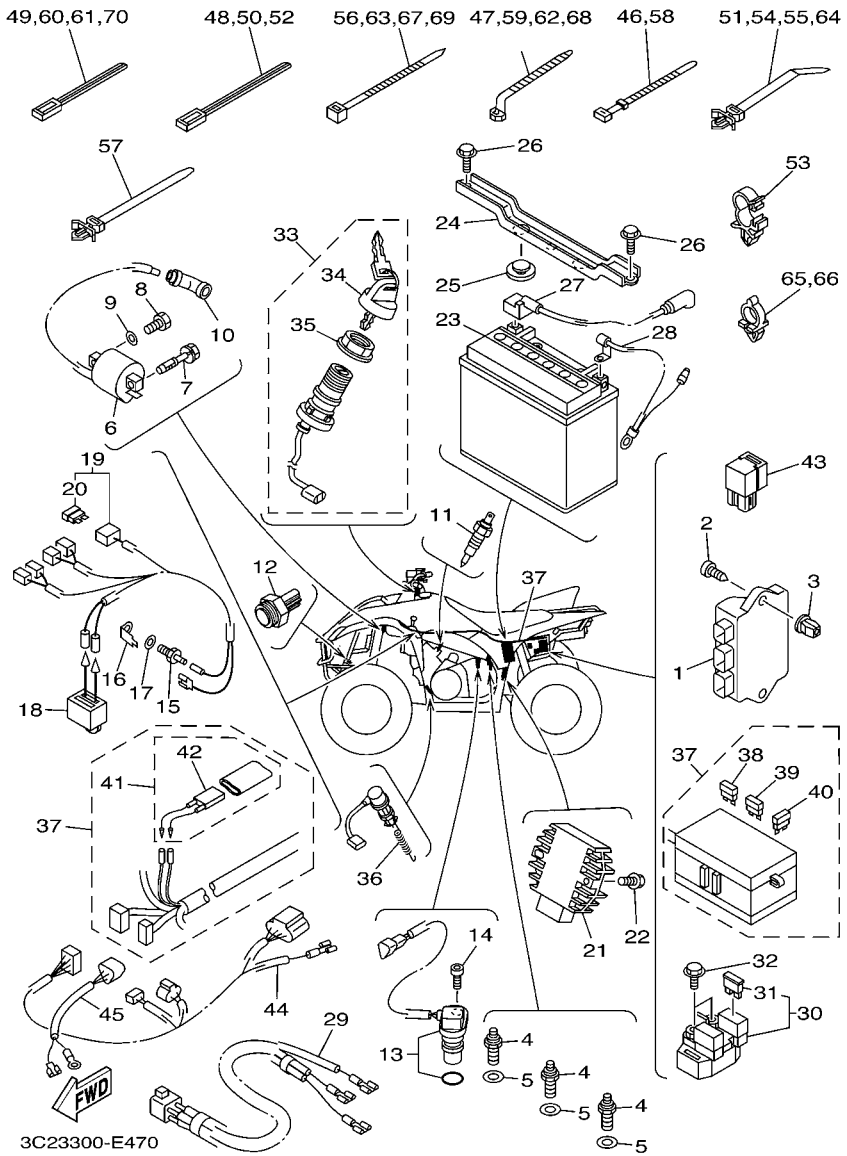

FIG. 48 ELECTRICAL 1

REF. NO.	PART NO.	DESCRIPTION	USA	CAN	EUR			REMARKS
28	5ND–H2116–00	WIRE, MINUS LEAD	1	1	1			
29	1P1–82541–00	WIRE, LEAD	1	1	1			
30	4SV–81940–12	STARTER RELAY ASSY	1	1	1			
31	1AE–82151–00	.FUSE (30A-BL)	2	2	2			
32	95022–06008	BOLT, FLANGE	2	2	2			
33	5ND–82510–00	MAIN SWITCH ASSY	1	1	1			
34	3HN–82579–00	.CAP, KEY	1	1	1			
35	3HN–82569–00	.NUT, MAIN SWITCH	1	1	1			
36	4KB–82530–10	STOP SWITCH ASSY	1	1	1			
37	3C2–82590–00	WIRE HARNESS ASSY	1	1	1			
38	5JJ–82151–10	.FUSE (15A-BL)	2	2	2			
39	5JJ–82151–30	.FUSE (10A-BL)	5	5	5			
40	5JJ–82151–50	.FUSE (3A-BL)	2	2	2			
41	5ND–82180–00	.CIRCUIT BREAKER ASSY	1	1	1			
42	5ND–82560–00	..THERMO SWITCH ASSY	1	1	1			
43	5DM–81950–00	RELAY ASSY (G8HN-1C4T-DJ-Y52)	1	1	1			
44	3C2–82309–00	WIRE, SUB LEAD	1	1	1			
45	3C2–82509–00	WIRE, SUB LEAD	1	1	1			
46	90464–51800	CLAMP	1	1	1			
47	90464–12830	CLAMP	1	1	1			
48	90464–40825	CLAMP	2	2	2			
49	90464–31827	CLAMP	4	4	4			
50	90464–40825	CLAMP	4	4	4			
51	90464–25800	CLAMP	2	2	2			
52	90464–40825	CLAMP	1	1	1			
53	90464–16006	CLAMP	2	2	2			
54	90464–25800	CLAMP	1	1	1			

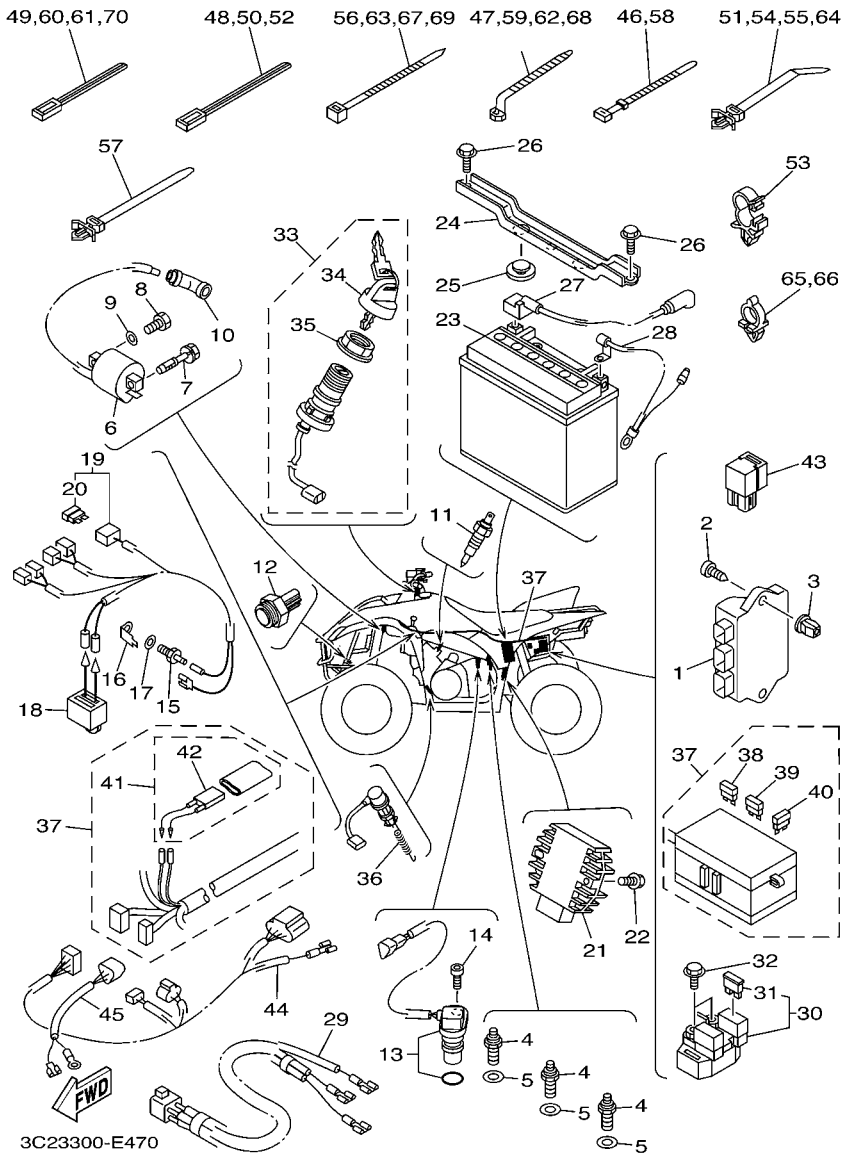

FIG. 48 ELECTRICAL 1

REF. NO.	PART NO.	DESCRIPTION	USA	CAN	EUR			REMARKS
55	90464–25800	CLAMP	2	2	2			
56	90464–48800	CLAMP	1	1	1			
57	90464–38800	CLAMP	1	1	1			
58	90464–51800	CLAMP	1	1	1			
59	90464–12830	CLAMP	1	1	1			
60	90464–31827	CLAMP	1	1	1			
61	90464–31827	CLAMP	2	2	2			
62	90464–12830	CLAMP	1	1	1			
63	90464–48800	CLAMP	1	1	1			
64	90464–25800	CLAMP	1	1	1			
65	90464–10833	CLAMP	1	1	1			
66	90464–10833	CLAMP	2	2	2			
67	90464–48800	CLAMP	1	1	1			
68	90464–12830	CLAMP	1	1	1			
69	90464–48800	CLAMP	1	1	1			
70	90464–31827	CLAMP	2	2	2			

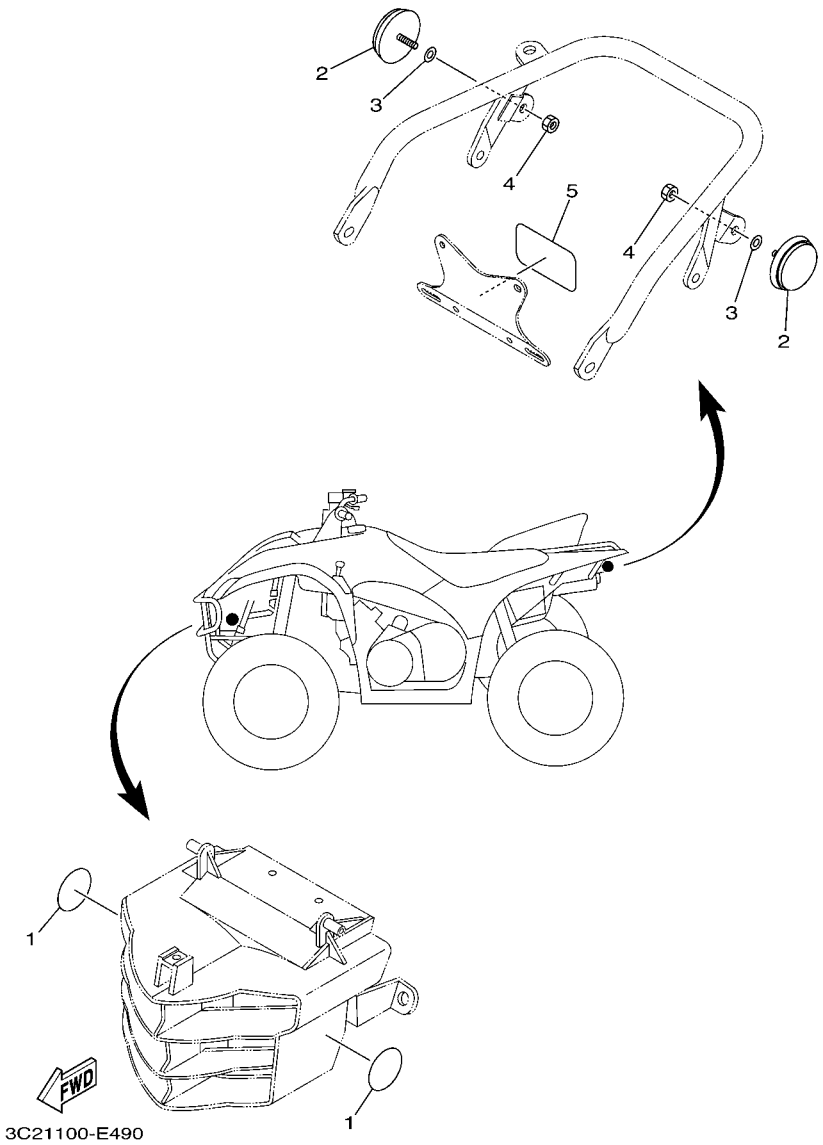

FIG. 49 ELECTRICAL 2

REF. NO.	PART NO.	DESCRIPTION	USA	CAN	EUR			REMARKS
1	3C2–H5111–00	REFLECTOR, FRONT 1		2				
2	449–85131–02	REFLECTOR, REAR 1		2				
3	92902–05200	WASHER		2				
4	95302–05600	NUT		2				
5	5UG–H5131–00	REFLECTOR, REAR 1		1	1			

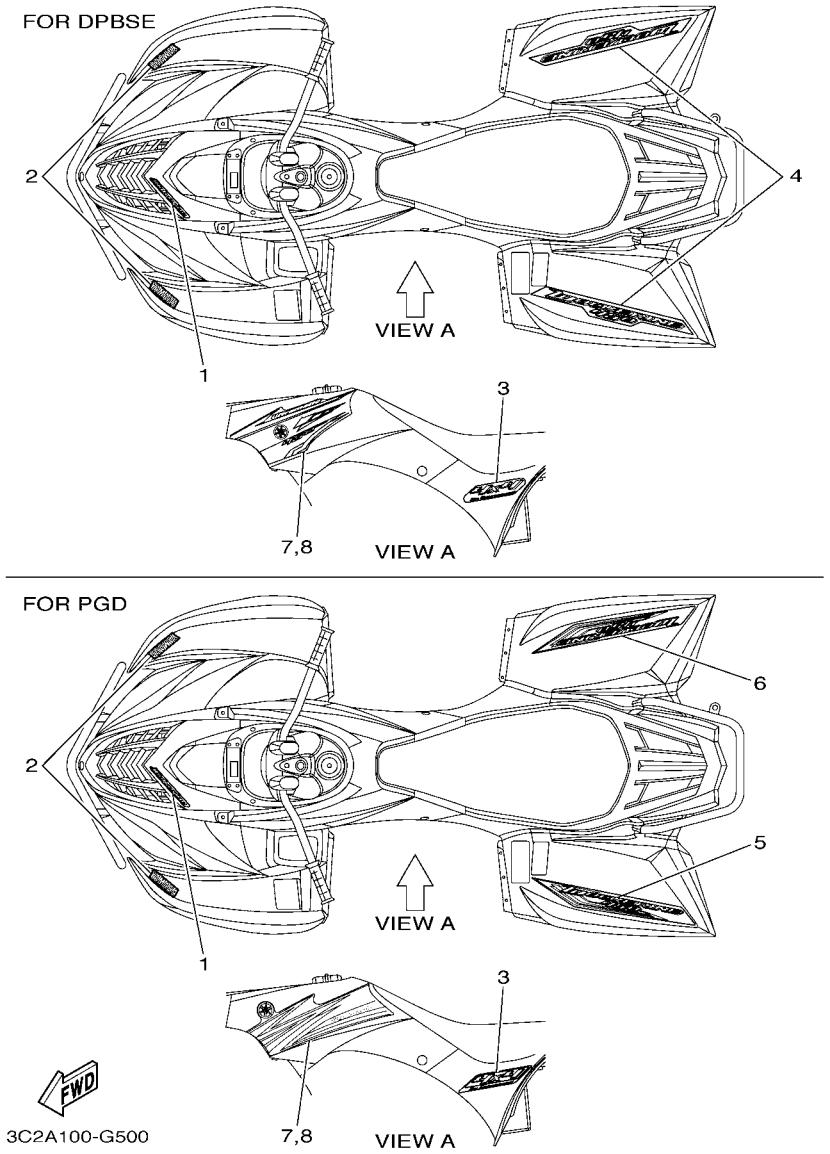

FIG. 50 GRAPHICS

REF. NO.	PART NO.	DESCRIPTION	USA	CAN	EUR			REMARKS
1	3C2–F1565–40	EMBLEM, 2	1	1	1			UR FOR DPBSE
	3C2–F1565–50	EMBLEM, 2	1	1	1			UR FOR PGD
2	3C2–F153E–20	EMBLEM, YAMAHA	2	2	2			
3	3C2–F1609–30	EMBLEM	2	2	2			UR FOR DPBSE
	3C2–F1609–40	EMBLEM	2	2	2			UR FOR PGD
4	3C2–F1675–30	GRAPHIC, REAR FENDER	2	2	2			FOR DPBSE
5	3C2–F165G–30	GRAPHIC, REAR (LH)	1	1	1			FOR PGD
6	3C2–F165H–30	GRAPHIC, REAR (RH)	1	1	1			FOR PGD
7	3C2–F1781–60	EMBLEM 1	1	1	1			UR FOR DPBSE
	3C2–F1781–50	EMBLEM 1	1	1	1			UR FOR PGD
8	3C2–F1782–60	EMBLEM 2	1	1	1			UR FOR DPBSE
	3C2–F1782–50	EMBLEM 2	1	1	1			UR FOR PGD

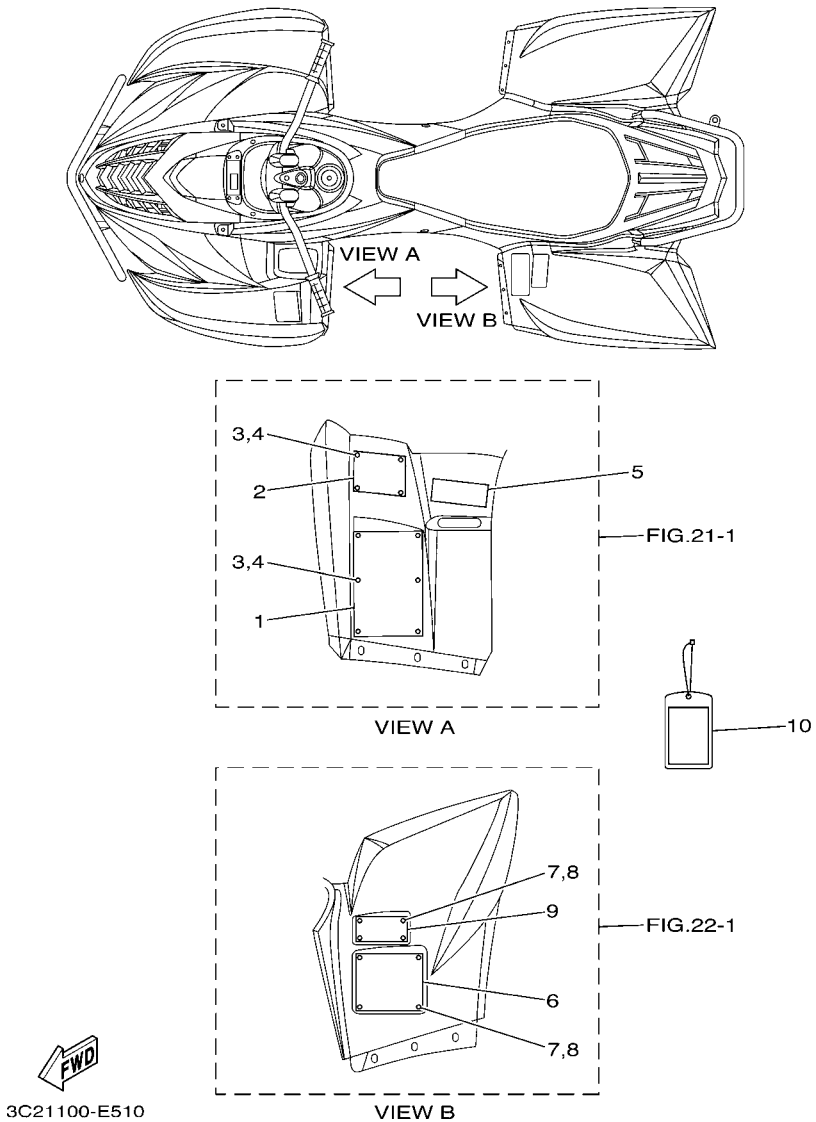

FIG. 51 EMBLEM & LABEL 1

REF. NO.	PART NO.	DESCRIPTION	USA	CAN	EUR			REMARKS
1	4XE–F1568–00	LABEL, WARNING	1					ENGLISH
2	4XE–F415A–00	LABEL, CAUTION	1					ENGLISH
3	4XE–F1539–10	RIVET	10					
4	4XE–F1549–00	WASHER, FENDER MOLD	10					
5	5ND–F151E–00	LABEL 2	1					ENGLISH
6	3C2–F1696–00	LABEL, CAUTION	1					ENGLISH
7	4XE–F1539–10	RIVET	8					
8	4XE–F1549–00	WASHER, FENDER MOLD	8					
9	3C2–F151H–00	LABEL 5	1					ENGLISH
10	3C2–F819R–00	TAG, WARNING	1					

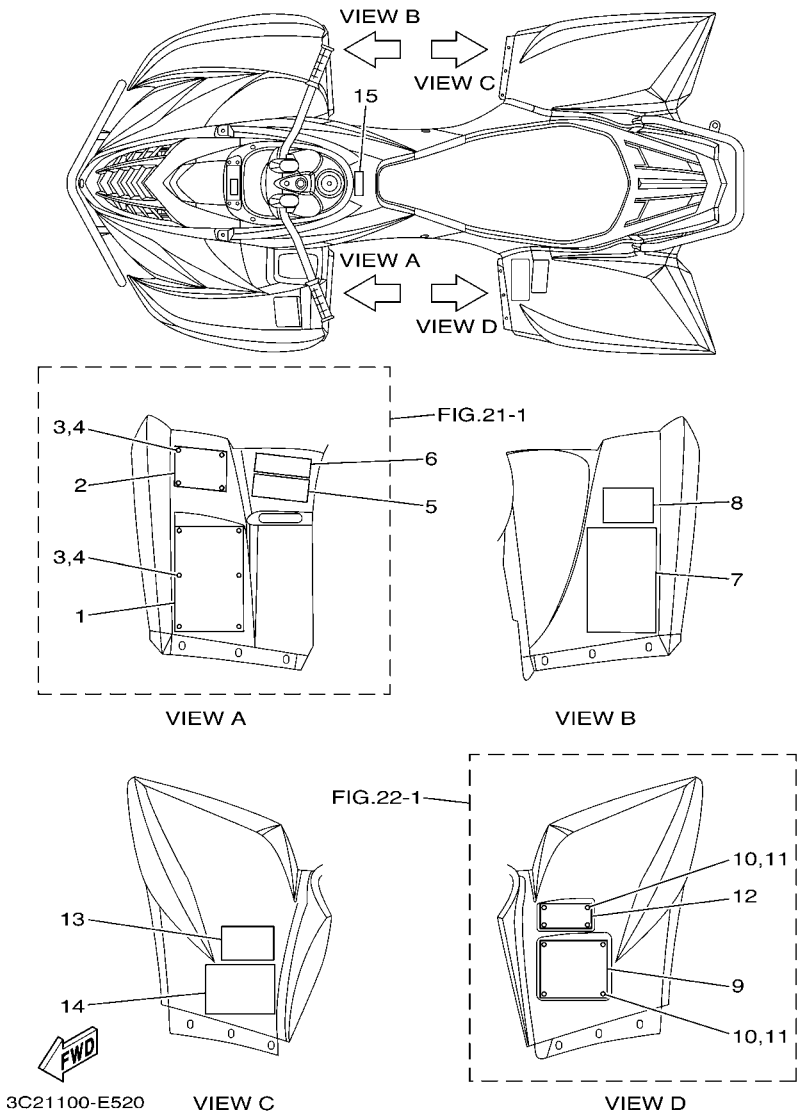

FIG. 52 EMBLEM & LABEL 2

REF. NO.	PART NO.	DESCRIPTION	USA	CAN	EUR			REMARKS
1	4XE–F1568–00	LABEL, WARNING		1				ENGLISH
2	4XE–F415A–00	LABEL, CAUTION		1				ENGLISH
3	4XE–F1539–10	RIVET		10				
4	4XE–F1549–00	WASHER, FENDER MOLD		10				
5	5ND–F151E–00	LABEL 2		1				ENGLISH
6	5ND–F151E–10	LABEL 2		1				FRENCH
7	4XE–F1568–20	LABEL, WARNING		1				FRENCH
8	4XE–F415A–10	LABEL, CAUTION		1				FRENCH
9	3C2–F1696–00	LABEL, CAUTION		1				ENGLISH
10	4XE–F1539–10	RIVET		8				
11	4XE–F1549–00	WASHER, FENDER MOLD		8				
12	3C2–F151H–00	LABEL 5		1				ENGLISH
13	4XE–F151H–10	LABEL 5		1				FRENCH
14	3C2–F1696–10	LABEL, CAUTION		1				FRENCH
15	4XE–F416E–00	LABEL, CAUTION CANADA		1				

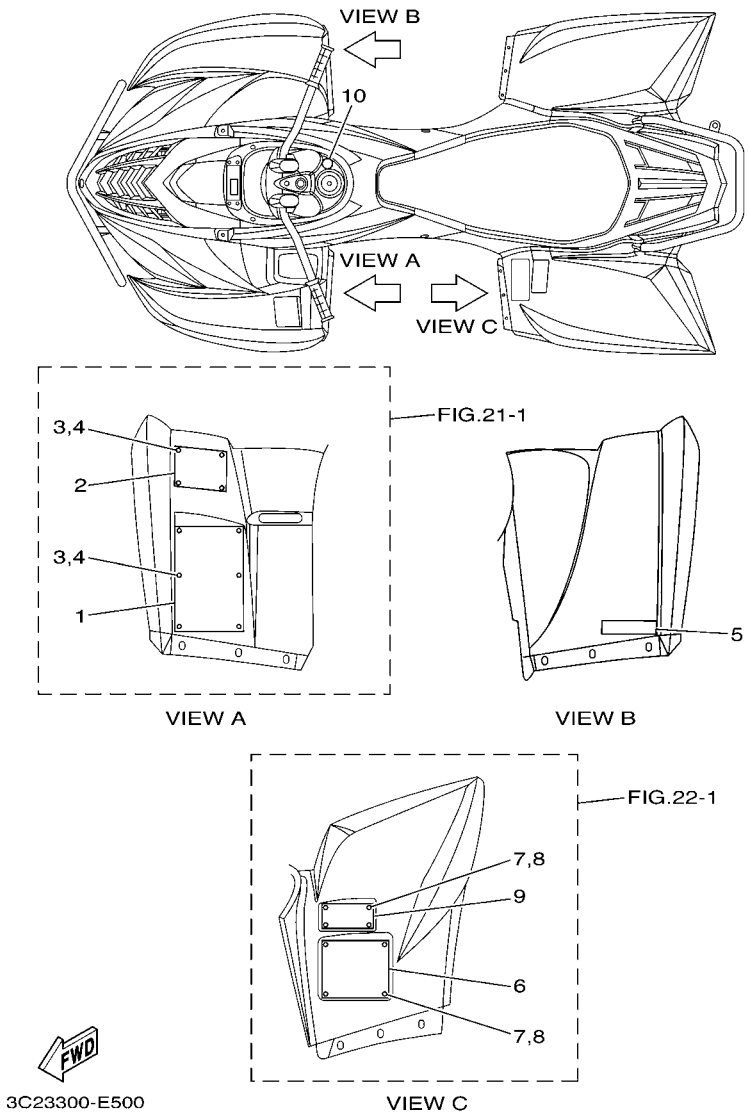

FIG. 53 EMBLEM & LABEL 3

REF. NO.	PART NO.	DESCRIPTION	USA	CAN	EUR			REMARKS
1	4XE–F1568–50	LABEL, WARNING			1			
2	4XE–F415A–20	LABEL, CAUTION			1			
3	4XE–F1539–10	RIVET			10			
4	4XE–F1549–00	WASHER, FENDER MOLD			10			
5	3C2–F155A–00	MARK, CE			1			
6	3C2–F1696–20	LABEL, CAUTION			1			
7	4XE–F1539–10	RIVET			8			
8	4XE–F1549–00	WASHER, FENDER MOLD			8			
9	3C2–F151H–20	LABEL 5			1			
10	4XE–F415E–10	LABEL, CAUTION			1			

NUMERICAL INDEX

PART NO.	GRID NO.
5GH–11110–00	B – 2
5GH–1111F–00	B – 2
3Y1–11133–11	B – 2
4KB–11145–00	B – 7
4WU–11160–01	B – 2
4KB–11165–00	B – 2
5GH–11181–00	B – 2
2NL–11186–12	B – 2
214–11198–01	B – 15
	D – 5
	D – 9
5ND–11310–00	B – 4
5GH–11351–00	B – 4
5ND–11400–00	B – 5
5GH–11447–00	B – 5
5ND–11500–00	B – 5
5ND–11603–00	B – 5
5ND–11605–00	B – 5
5ND–11607–00	B – 5
5ND–11631–00	B – 5
3LD–11633–00	B – 5
5ND–11636–00	B – 5
5ND–11638–00	B – 5
5GH–11651–01	B – 5
5GH–11681–00	B – 5
5GH–12111–00	B – 6
22U–12113–00	B – 6
1UY–12114–01	B – 6
3Y1–12116–00	B – 6
3Y1–12117–01	B – 6
1J7–12118–00	B – 6
5GH–12121–00	B – 6
M01–12129–00	B – 6
3GD–12151–00	B – 6
3Y1–12156–00	B – 6
31G–12158–00	B – 6
31G–12159–02	B – 6
5GH–12171–00	B – 7
5GH–12176–10	B – 7
31G–12210–01	B – 7
3GD–12213–00	B – 7
31G–12214–00	B – 7
31G–12222–00	B – 7
5GH–12231–10	B – 7
5GH–12241–00	B – 7
2TV–12411–00	B – 9
5GH–12413–00	B – 9
5GH–12420–01	B – 8

PART NO.	GRID NO.
5GH–12421–01	B – 8
5GH–12422–00	B – 8
5GH–12428–00	B – 8
11H–12438–10	B – 8
5GH–12446–00	B – 9
5CG–12450–00	B – 8
5GH–12481–00	B – 9
5GH–12484–00	B – 9
4KB–13161–01	B – 10
3Y1–13310–01	B – 10
5GH–13314–00	B – 10
1UY–13316–00	B – 10
5GH–13324–00	B – 10
5GH–13325–00	B – 10
3GD–13329–00	B – 10
1UY–13336–00	B – 10
51Y–13411–00	B – 10
2XK–13416–00	B – 10
5GH–13440–20	B – 10
5GH–13586–00	B – 11
5GH–14103–01	B – 13
5ND–14105–00	B – 12
5GH–14105–10	B – 12
5UH–14107–20	B – 12
5GH–1410A–00	B – 12
5ND–1410A–00	B – 12
5DM–14112–00	B – 12
5DM–14141–40	B – 12
4KM–14142–17	B – 13
3H1–14147–00	B – 12
522–14161–00	B – 13
127–14186–00	B – 12
3FV–14191–00	B – 12
24W–14193–00	B – 11
4KB–14193–20	B – 12
5GH–14197–00	B – 13
3DM–14216–00	B – 13
4KM–14216–00	B – 12
3G2–14231–14	B – 12
1HX–14231–16	B – 12
3G2–1423E–52	B – 12
5GH–14261–00	B – 12
31A–14419–00	B – 11
5BF–1443E–00	C – 3
	C – 12
583–14561–00	B – 12
5DM–14561–00	B – 12
1FN–14565–00	B – 13

PART NO.	GRID NO.
3GD–14613–00	B – 14
5ND–1490H–00	B – 13
5ND–1490J–00	B – 12
5ND–1490J–10	B – 12
5GH–14918–00	B – 13
5GH–14918–10	B – 12
5DM–14933–00	B – 12
4XE–14937–00	B – 13
5GH–14937–00	B – 13
5GH–14940–10	B – 12
256–14956–01	B – 13
3H1–14962–00	B – 12
5DM–14985–00	B – 13
3C2–15100–02	B – 15
5GH–15113–00	C – 3
5GH–15163–00	B – 15
5GH–15317–00	C – 3
5GH–15333–00	C – 2
5GH–15338–00	C – 2
4HC–15351–00	B – 10
5KM–15351–00	C – 3
5GH–15362–00	B – 15
2N4–15371–00	D – 5
5GH–15379–00	C – 3
4WV–15381–00	C – 2
2K7–15383–00	B – 15
11H–15383–02	C – 9
5GH–15388–00	B – 15
5GH–15411–01	C – 3
5GH–15414–00	B – 15
5ND–15431–00	C – 3
5GH–15442–01	C – 2
5GH–15451–00	C – 3
5GH–15454–00	B – 15
5GH–15463–00	B – 15
3C2–15492–00	C – 3
5GH–15512–00	C – 5
5GH–15517–10	C – 5
4KB–15522–01	C – 5
1UY–15590–01	C – 5
21V–15719–00	C – 3
3GD–15777–10	C – 4
5GH–16611–10	C – 6
5GH–16620–00	C – 6
5GH–16626–00	C – 6
5GH–16664–00	C – 6
5GH–17223–00	C – 8
1P1–17285–00	C – 8

PART NO.	GRID NO.
1P1–17402–00	C – 8
5GH–17453–10	C – 8
5GH–17473–00	C – 8
5GH–17521–00	C – 9
5ND–17523–00	C – 8
4VR–17527–00	C – 10
4WV–17530–00	C – 9
5GH–17531–00	C – 9
52G–17531–01	C – 9
5GH–17531–10	C – 9
52G–17531–11	C – 9
5GH–17531–20	C – 9
52G–17531–21	C – 9
5GH–17531–30	C – 9
52G–17531–31	C – 9
5GH–17531–40	C – 9
52G–17531–41	C – 9
5GH–17531–50	C – 10
52G–17531–51	C – 9
5GH–17531–60	C – 10
5GH–17551–00	C – 9
5UH–17556–00	C – 9
5GH–17582–00	C – 8
5GH–17583–00	C – 8
5UH–17585–00	C – 10
5GH–17606–00	C – 6
5UH–17611–00	C – 6
5UH–1761A–00	C – 10
5GH–17620–00	C – 6
5GH–17623–00	C – 6
5GH–17632–00	C – 6
5GH–17639–00	C – 6
3C2–17641–00	C – 6
4WV–17644–00	C – 7
4WV–17653–00	C – 6
4WV–17654–01	C – 6
5GH–17660–10	C – 6
4CW–17664–00	C – 7
5GH–17670–00	C – 6
5TE–17681–00	C – 8
4WV–17684–00	C – 7
5GH–18104–00	C – 12
3C2–18115–00	C – 12
5GH–18129–01	C – 12
5GH–1812E–00	C – 11
5GH–18131–00	C – 12
5GH–18146–00	C – 12
5GH–18148–00	C – 11

PART NO.	GRID NO.
1P1–18174–00	C – 12
5KM–18191–00	C – 12
5GH–18197–00	C – 12
4SH–18198–00	C – 12
1P1–18300–01	C – 12
5GH–18318–00	D – 8
5GH–18319–00	D – 8
1D9–18511–00	C – 11
5GH–18514–01	D – 8
4KB–18531–01	C – 11
1P1–18540–00	C – 11
5GH–18617–00	C – 12
1D9–2177C–20	B – 11
1AA–21815–00	D – 3
1AA–21874–00	D – 3
1W1–22128–00	D – 10
4GY–22898–50	E – 6
2HR–23526–00	D – 11
1UY–23812–00	D – 12
8K1–23814–00	D – 12
2GU–23872–00	C – 13
1UY–23894–01	D – 12
4EW–2412F–00	D – 13
3C2–24311–00	D – 13
3C2–24500–00	D – 13
4X8–24512–00	D – 13
3AC–24523–00	D – 13
3HE–24524–00	D – 13
3AJ–24534–01	D – 13
5KM–24610–00	D – 13
5GH–2510G–00	D – 15
3HN–2510H–00	D – 15
5GH–2510J–00	D – 15
3HN–2511G–01	D – 15
3HN–2511H–00	D – 15
5GT–2512A–00	D – 15
	E – 5
3HN–2512G–01	D – 15
4KB–2512H–00	D – 15
2HR–2512J–00	D – 15
4SH–25367–01	E – 5
3GD–2580T–00	E – 4
3GD–2580U–00	E – 4
3C2–2580V–00	E – 6
3GD–25827–00	E – 4
3GD–25828–00	E – 4
5GH–25828–00	E – 6
31A–2582A–50	E – 10

PART NO.	GRID NO.
5KM–2583T–01	E – 8
5KM–2583V–00	E – 10
5GH–25844–00	E – 10
4PX–25852–00	E – 10
5JX–25852–01	E – 8
2VN–25854–00	E – 10
4L0–25854–00	E – 8
2VN–25855–00	E – 10
2GU–25866–00	E – 8
5GH–25867–00	E – 8
2VN–25894–00	E – 10
1FK–2589F–00	E – 8
3GM–2589H–00	E – 10
4GY–25919–50	E – 6
5GH–25924–00	E – 6
3GD–25933–00	E – 4
1NV–26129–00	E – 7
1P1–26250–00	E – 7
1NV–26259–01	E – 7
1NV–2625G–01	E – 7
1NV–2625K–00	E – 7
4KB–2628F–10	E – 7
4KB–2628G–00	E – 7
1NV–26304–00	E – 7
5GH–26311–10	E – 7
5EB–26332–00	E – 8
3C2–26341–10	E – 10
5GH–2637F–10	E – 11
1NV–26398–00	E – 7
109–27114–00	D – 4
4SS–27218–00	E – 10
2YK–27222–00	E – 10
1NV–2811A–01	C – 14
3HN–46108–01	D – 7
4WV–46119–01	D – 8
4WV–46119–11	D – 8
4WV–46119–21	D – 8
4WV–46119–31	D – 8
4WV–46119–41	D – 8
4WV–46119–51	D – 8
5GH–46123–00	D – 9
29U–46125–00	D – 5
5GH–46126–01	D – 9
4WV–46132–00	D – 8
5GH–46136–00	D – 9
5KM–46137–00	D – 9
5GH–46141–01	D – 8
4WV–46143–00	D – 8

NUMERICAL INDEX

PART NO.	GRID NO.
4WV–46155–00	D – 8
4WV–46159–00	D – 8
5GH–46160–04	D – 8
5GH–46161–01	D – 8
5GH–46162–01	D – 8
4WV–46165–00	D – 8
4WV–46167–00	D – 8
5GH–4616A–02	D – 8
2HR–46187–00	D – 7
4WV–46441–00	D – 8
5GH–46470–03	D – 8
5ND–81410–00	E – 13
5GH–81450–01	E – 13
3AJ–81801–00	E – 14
5ND–81815–01	E – 14
3AJ–81826–00	E – 14
4XV–8182A–00	E – 14
11H–81844–00	E – 14
1FK–81847–00	E – 14
5KM–81890–00	E – 14
4SV–81940–12	F – 7
5DM–81950–00	F – 7
5GT–81960–00	F – 6
5FU–82103–00	F – 6
371–82121–00	F – 6
1AE–82151–00	F – 7
42X–82151–00	F – 6
5JJ–82151–10	F – 7
5JJ–82151–30	F – 7
5JJ–82151–50	F – 7
5ND–82180–00	F – 7
3C2–82309–00	F – 7
3KJ–82310–10	F – 6
1UY–82370–20	F – 6
3C2–82509–00	F – 7
5ND–82509–00	F – 6
5ND–82510–00	F – 7
4KB–82530–10	F – 7
3GB–82540–01	F – 6
3GD–82540–11	D – 8
1P1–82541–00	F – 7
5KM–82560–00	F – 6
5ND–82560–00	F – 7
5ND–82560–10	F – 6
5FU–82560–20	F – 6
3HN–82569–00	F – 7
3HN–82579–00	F – 7
3C2–82590–00	F – 7

PART NO.	GRID NO.
1YW–82911–02	F – 5
2XJ–82913–00	F – 5
4V4–82913–00	E – 7
5KM–82917–00	F – 5
3C2–83500–00	E – 15
3C2–83500–10	E – 15
3C2–83755–00	F – 6
5FU–83790–00	F – 6
1UY–83909–00	F – 5
2HT–83912–00	F – 5
5KM–83922–00	E – 8
5GH–83941–00	F – 5
3L4–83943–00	F – 5
5LP–83973–01	F – 5
1P1–83976–00	E – 7
5LP–83980–00	E – 8
5TG–84110–03	F – 2
5TG–84140–01	F – 2
5TG–84165–01	F – 2
5TG–84166–01	F – 2
5TG–84310–03	F – 2
4KB–84314–01	F – 2
5TG–84340–01	F – 2
5LP–84700–11	F – 3
	F – 4
256–84714–60	F – 3
	F – 4
4TR–84723–00	F – 3
	F – 4
4TR–84733–00	F – 3
	F – 4
449–85131–02	F – 9
3C2–85540–00	F – 6
3C2–E1166–00	B – 2
5ND–E2405–01	B – 9
3C2–E2460–00	B – 9
3C2–E2461–00	B – 9
5ND–E2462–00	B – 9
3C2–E2482–00	B – 9
3C2–E2483–00	B – 9
5ND–E2535–00	B – 9
5ND–E2675–00	B – 9
3C2–E2692–00	C – 4
5ND–E4101–01	B – 12
5ND–E4101–11	B – 12
5FU–E4147–00	B – 13
5FU–E4155–00	B – 13
5UH–E4191–00	B – 11

PART NO.	GRID NO.
5ND–E4349–00	B – 11
5UH–E4411–00	B – 11
5UH–E4412–00	B – 11
5UH–E4424–00	B – 11
5ND–E442F–00	B – 11
5ND–E4437–02	B – 11
5UH–E4438–00	B – 11
5UH–E4451–10	B – 11
5ND–E4453–00	B – 11
5UH–E4458–00	B – 11
5UH–E4462–00	B – 11
5UH–E4468–00	B – 11
5ND–E4611–00	B – 14
5ND–E4628–00	B – 14
5ND–E4711–00	B – 14
5ND–E4714–00	B – 14
5ND–E4715–00	B – 14
5ND–E4718–00	B – 14
5ND–E4719–00	B – 14
5ND–E4728–00	B – 14
5ND–E4737–00	B – 14
3C2–E4752–00	B – 14
5ND–E4759–00	B – 14
5UH–E4769–10	B – 11
5ND–E4777–00	B – 14
5ND–E477K–02	B – 14
3C2–E4787–00	B – 14
5ND–E4788–00	B – 14
5ND–E5336–00	C – 3
	C – 13
5ND–E5413–00	C – 4
5ND–E5423–00	C – 4
3C2–E5471–00	C – 3
3C2–E5472–00	C – 4
5ND–E5472–00	C – 3
5ND–E5473–00	C – 4
5ND–E5474–00	C – 4
4XE–E7537–15	D – 5
4XE–E7537–30	D – 5
4XE–E7537–40	D – 5
4XE–E7537–45	D – 6
4XE–E7537–50	D – 6
4XE–E7537–60	D – 6
3C2–F1110–00	C – 13
5FU–F111A–00	C – 14
3C2–F1228–00	C – 14
5ND–F1315–01	C – 13
5ND–F1316–01	C – 13

PART NO.	GRID NO.
3C2–F142M–00	B – 9
3C2–F142N–00	B – 9
3C2–F1446–01	C – 14
5ND–F147A–02	C – 14
5ND–F1486–00	C – 13
5ND–F1488–00	C – 13
3C2–F1500–00	C – 15
3C2–F1500–20	C – 15
3C2–F1500–40	C – 15
3C2–F1500–50	C – 15
5ND–F151E–00	F – 11
	F – 12
5ND–F151E–10	F – 12
3C2–F151H–00	F – 11
	F – 12
4XE–F151H–10	F – 12
3C2–F151H–20	F – 13
4XE–F1539–10	F – 11
	F – 12
	F – 13
3C2–F153E–20	F – 10
4XE–F1549–00	F – 11
	F – 12
	F – 13
3C2–F1556–80	C – 15
3C2–F1556–A0	C – 15
3C2–F155A–00	F – 13
3C2–F1565–40	F – 10
3C2–F1565–50	F – 10
4XE–F1568–00	F – 11
	F – 12
4XE–F1568–20	F – 12
4XE–F1568–50	F – 13
5ND–F1585–01	C – 14
3C2–F1600–00	D – 2
3C2–F1600–20	D – 2
3C2–F1600–40	D – 2
3C2–F1600–50	D – 2
3C2–F1609–30	F – 10
3C2–F1609–40	F – 10
3C2–F163A–00	D – 2
5ND–F163E–00	D – 2
5ND–F163F–00	D – 2
5ND–F1652–00	D – 2
3C2–F165G–30	F – 10
3C2–F165H–30	F – 10
3C2–F1675–30	F – 10
3C2–F1696–00	F – 11

PART NO.	GRID NO.
3C2–F1696–00	F – 12
3C2–F1696–10	F – 12
3C2–F1696–20	F – 13
3C2–F171A–30	D – 3
3C2–F171A–80	D – 3
5FU–F174A–01	D – 2
3C2–F1781–50	F – 10
3C2–F1781–60	F – 10
3C2–F1782–50	F – 10
3C2–F1782–60	F – 10
3C2–F1823–00	C – 4
5ND–F1871–00	D – 3
3C2–F2110–00	D – 4
5ND–F2123–00	D – 4
5ND–F2189–00	D – 4
4XE–F219X–01	D – 4
3C2–F2210–00	D – 10
3C2–F2210–20	D – 10
5ND–F2825–00	C – 14
5ND–F3123–00	D – 11
5ND–F3192–01	E – 8
3C2–F3350–00	D – 11
3C2–F3350–20	D – 11
5ND–F3501–10	D – 15
5ND–F3502–10	E – 2
5ND–F3540–12	D – 11
5FU–F3549–00	D – 11
	D – 15
5ND–F3550–12	D – 11
5ND–F357A–01	D – 11
5ND–F358A–01	D – 11
3C2–F3813–00	D – 12
5ND–F3816–11	D – 12
5ND–F3831–00	D – 12
4XE–F3833–00	D – 12
4XE–F3834–00	D – 12
1D9–F3841–01	D – 12
5ND–F3845–01	D – 12
5ND–F3868–00	D – 12
3C2–F4110–00	D – 13
3C2–F4110–10	D – 13
3C2–F4144–00	C – 14
3C2–F414H–00	D – 13
4XE–F415A–00	F – 11
	F – 12
4XE–F415A–10	F – 12
4XE–F415A–20	F – 13
4XE–F415E–10	F – 13

PART NO.	GRID NO.
4XE–F416E–00	F – 12
3C2–F4311–00	D – 13
3C2–F4710–00	D – 14
3C2–F4731–00	D – 14
4XE–F4747–00	D – 14
3C2–F4776–00	D – 14
4XE–F478V–00	D – 14
5TE–F510F–00	D – 15
5ND–F5111–21	D – 15
5ND–F514A–00	E – 3
3C2–F5180–10	D – 15
5TE–F518F–00	D – 15
5ND–F5381–00	E – 5
5ND–F5383–01	E – 5
3C2–F5390–10	E – 5
5ND–F5712–10	E – 6
5ND–F5718–00	E – 5
5ND–F582T–00	E – 4
5ND–F5831–10	E – 6
5ND–F5871–00	E – 8
3C2–F5872–01	E – 8
5ND–F5873–01	E – 8
5ND–F5874–01	E – 10
5ND–F5875–01	E – 8
3C2–F5895–00	E – 10
3C2–F6111–00	E – 7
5ND–F6124–00	E – 7
5FU–F6241–10	E – 7
3C2–F6331–00	E – 7
5ND–F637G–00	E – 10
5ND–F7211–00	E – 9
5ND–F7252–10	E – 9
5ND–F7412–10	E – 9
3C2–F741A–00	E – 9
5ND–F7445–00	E – 9
3C2–F7453–00	E – 9
3C2–F7463–00	E – 9
3C2–F7471–00	E – 9
5ND–F7491–00	E – 11
5ND–F8100–00	C – 14
3C2–F819R–00	F – 11
3C2–F8309–00	C – 15
3C2–F831V–00	C – 13
3C2–F832V–00	C – 13
3C2–F836B–00	C – 15
3C2–F845N–10	E – 12
3C2–F845R–20	E – 12
3C2–F845R–30	E – 12

PART NO.	GRID NO.
5ND–G6101–03	D – 5
4XE–G6102–00	D – 5
4XE–G6117–25	D – 6
4XE–G6117–30	D – 6
4XE–G6117–35	D – 6
4XE–G6117–40	D – 6
4XE–G6117–45	D – 6
4XE–G6117–50	D – 6
4XE–G6118–10	D – 6
4XE–G6118–11	D – 6
4XE–G6118–12	D – 6
4XE–G6118–13	D – 6
4XE–G6118–14	D – 6
4XE–G6118–15	D – 6
4XE–G6118–16	D – 6
4XE–G6118–17	D – 6
4XE–G6118–18	D – 6
4XE–G6118–19	D – 6
4XE–G6118–20	D – 6
4XE–G6118–21	D – 6
5ND–G6151–01	D – 5
5ND–G6152–00	D – 5
5FU–G6156–00	D – 5
5FU–G6157–10	D – 6
5FU–G6157–15	D – 6
5FU–G6157–20	D – 6
5FU–G6157–30	D – 6
5FU–G6157–40	D – 6
5FU–G6157–50	D – 6
5ND–G6172–10	D – 7
5TE–G6173–10	D – 9
5ND–G6540–13	D – 4
5FU–H2100–20	F – 6
3C2–H2115–00	F – 6
5ND–H2116–00	F – 7
5ND–H2128–01	F – 6
3C2–H4751–00	F – 4
3C2–H5111–00	F – 9
5UG–H5131–00	F – 9
3C2–K7173–00	C – 14
JJ3–K818M–00	C – 14
8CR–W0041–00	E – 8
5KM–W0042–50	E – 10
3GD–W0045–00	E – 4
3C2–W0046–00	E – 6
3GD–W0047–00	E – 4
	E – 6
1UY–W0048–50	E – 4

PART NO.	GRID NO.
1UY–W0048–50	E – 6
3GD–W0057–00	E – 4
3TB–W0057–00	E – 6
5ND–W1141–00	B – 5
5ND–W1142–00	B – 5
5GT–Y4612–00	D – 5
90101–06053	F – 2
90101–10016	B – 7
90101–10017	B – 5
90105–06048	E – 10
90105–06086	B – 8
90105–08150	C – 9
90105–08161	E – 4
	E – 6
90105–10051	C – 13
90105–10136	B – 2
90105–10137	B – 2
90105–10267	D – 11
90105–10284	C – 13
90105–10751	E – 5
90105–10841	D – 11
90105–12057	D – 4
90105–12803	D – 10
90105–14003	C – 11
90109–06072	E – 9
90109–06172	C – 14
90109–06799	F – 5
90109–06873	F – 6
90109–08076	C – 15
90109–08082	E – 4
90109–081F0	E – 6
90110–05201	C – 15
	D – 3
90110–06001	F – 6
90110–06007	D – 3
90110–06189	B – 9
90113–08004	D – 8
90114–10014	D – 15
	E – 5
90116–10593	D – 5
90119–06157	D – 2
	D – 3
90119–06227	B – 11
90119–06883	D – 13
90123–08046	F – 5
90149–04278	E – 7
90149–05299	E – 9
90149–06108	D – 13

PART NO.	GRID NO.
90149–06280	C – 14
90149–08013	C – 9
90151–05023	C – 3
90151–06010	D – 13
90151–06023	B – 15
90153–06002	B – 4
90157–04006	C – 6
90170–08358	C – 12
90170–14284	B – 10
90170–36279	C – 7
90171–12001	D – 11
	D – 12
90171–16002	E – 2
	E – 5
90179–08148	F – 5
90179–08410	B – 14
90179–10020	D – 15
	E – 5
90179–16005	C – 6
90179–22005	C – 6
90179–22015	C – 9
90179–55660	C – 10
90179–65305	C – 9
90183–050A0	E – 15
90183–050A8	C – 15
	D – 3
90183–06053	D – 11
90185–10012	D – 11
90185–12009	D – 10
90185–14009	C – 9
	D – 12
90201–047R9	C – 6
90201–05042	E – 9
90201–06036	C – 12
90201–06042	E – 10
90201–06060	C – 11
90201–06078	F – 2
90201–06090	D – 13
90201–08016	F – 6
90201–08066	E – 10
90201–08070	B – 11
90201–10035	C – 13
	E – 5
90201–10036	D – 7
90201–10038	B – 5
90201–10056	B – 14
90201–10118	E – 8
	E – 10

PART NO.	GRID NO.
90201–10128	B – 2
90201–10591	B – 7
90201–114P2	B – 10
90201–12049	D – 10
90201–123K4	C – 5
90201–132G5	C – 12
90201–14021	D – 12
90201–14023	E – 9
90201–14633	C – 9
90201–15564	C – 11
90201–16804	D – 15
	E – 5
90201–190T7	C – 6
90201–20278	C – 8
90201–250R9	C – 8
90201–25291	C – 5
90201–356K1	B – 5
90202–05193	D – 13
90215–06003	B – 2
90215–14205	B – 10
90240–06076	E – 10
90240–08013	E – 10
90240–12092	D – 10
90267–489U9	E – 9
90269–05055	C – 12
90269–06800	C – 4
90269–08813	C – 4
90280–05048	B – 5
90282–05013	B – 10
90336–28053	D – 12
90338–08226	F – 6
90338–09801	D – 2
90340–10001	D – 9
90340–14002	B – 15
90340–14029	B – 15
	D – 5
	D – 9
90340–14046	D – 5
90340–14117	C – 3
90340–18003	B – 15
90387–0613B	C – 12
90387–066J1	D – 13
90387–072Y2	B – 9
90387–07391	F – 3
	F – 4
90387–07598	D – 13
	F – 2
90387–090R0	D – 12

PART NO.	GRID NO.
90387–10636	B – 14
90387–16547	B – 4
90387–1914K	C – 6
90387–252R2	C – 10
90387–255H9	D – 5
90387–26001	C – 8
90401–06001	B – 2
90401–08006	B – 10
90401–10015	E – 8
	E – 10
90401–20145	B – 10
90430–06014	B – 4
	B – 8
90430–06192	B – 2
90430–08119	B – 10
90430–10003	D – 9
90430–10148	F – 6
90430–14194	C – 11
90430–14240	B – 2
90430–18130	B – 15
90445–070J5	D – 9
90445–07810	D – 7
90445–081K8	D – 3
90445–088C5	D – 13
90446–06001	B – 8
90450–32015	B – 9
90450–47002	B – 11
90450–56008	B – 11
90450–58002	B – 11
90450–64002	C – 4
90460–85277	D – 4
90464–10833	F – 8
90464–12830	F – 7
90464–16006	F – 7
90464–25800	F – 7
90464–31827	F – 7
90464–38800	F – 8
90464–39800	B – 2
90464–40825	F – 7
90464–48800	F – 8
90464–51800	F – 7
90465–08127	C – 3
90465–08336	C – 12
90467–06194	B – 8
90467–07029	D – 7
	D – 9
90467–08003	D – 3
90467–100A1	D – 13

PART NO.	GRID NO.
90467–11044	E – 10
90467–140A4	B – 2
90467–140A5	E – 10
90467–150A2	C – 12
90467–160A4	C – 3
90467–26800	B – 9
90468–18121	B – 9
90480–01400	D – 13
90480–10517	C – 14
90480–13004	C – 14
90480–13018	C – 3
90480–13398	C – 4
90480–14102	F – 2
90480–14555	F – 3
	F – 4
90480–15235	B – 9
90480–18290	D – 13
90501–10353	C – 11
90501–160A1	C – 11
90501–18576	B – 10
90501–296L7	D – 9
90501–626L9	C – 7
90501–650L5	C – 10
90506–07135	D – 4
90506–12441	E – 9
90508–235B7	C – 11
90508–35764	C – 12
90560–30325	D – 15
91312–05012	E – 13
91312–06012	B – 9
91312–06020	B – 2
	B – 9
91312–06025	B – 2
91312–06140	B – 2
91312–08016	C – 5
91312–08025	B – 11
91317–08020	D – 8
91402–16012	E – 10
91402–20012	E – 11
91402–20025	D – 12
91402–25020	D – 11
	D – 12
91402–30025	D – 10
91402–30030	E – 2
	E – 5
91810–20001	C – 2
91A20–07010	B – 11
92012–06012	E – 5

PART NO.	GRID NO.
92014–05014	E – 15
92502–06030	E – 13
92902–04100	B – 13
92902–05200	F – 9
92902–05600	E – 7
92902–06600	B – 7
	C – 2
	E – 13
	F – 6
92902–08600	C – 10
	D – 5
92907–04600	B – 13
92907–05100	F – 5
93101–10090	B – 8
93101–12168	C – 2
93101–31167	C – 6
93101–35097	C – 9
93101–38098	D – 5
93101–52116	D – 5
93102–15212	C – 11
93102–24034	D – 9
93102–25081	C – 13
93102–25099	C – 13
93102–28476	C – 3
93102–30170	C – 10
93102–32483	B – 15
93102–35380	C – 10
93102–42004	C – 8
93102–50030	D – 9
93102–65386	D – 5
93104–09025	E – 7
93104–41119	C – 6
93106–38046	D – 15
	E – 5
93106–38047	D – 15
93106–47040	E – 5
93112–31011	D – 12
93210–09165	B – 6
93210–11073	C – 12
93210–14369	C – 3
93210–15620	E – 10
93210–16290	B – 5
93210–18322	B – 4
93210–18417	B – 9
93210–19026	B – 15
93210–26001	C – 8
93210–27666	D – 15
	E – 5

PART NO.	GRID NO.
93210–33133	B – 8
93210–33786	B – 9
93210–35520	B – 10
93210–44545	B – 11
	C – 7
93210–50768	D – 8
93210–57634	B – 2
93210–59531	D – 5
93210–76800	D – 7
93210–78544	C – 9
93210–89447	B – 4
93211–06635	B – 2
93211–40040	D – 8
93211–51749	D – 5
93211–52001	C – 6
93306–00006	B – 8
93306–00208	C – 11
93306–00415	C – 8
93306–00438	B – 7
93306–00515	B – 7
93306–00612	C – 10
93306–006Y2	D – 15
	E – 5
93306–008Y0	E – 5
93306–07801	C – 3
93306–20120	C – 2
93306–203YN	C – 13
93306–20464	C – 8
93306–20582	C – 10
93306–20601	C – 8
93306–20622	C – 9
93306–20715	C – 9
93306–30201	C – 8
93306–30315	B – 5
93306–30438	B – 5
93306–30538	C – 9
93306–305Y6	D – 5
93306–30629	B – 5
93310–212R6	C – 5
93310–32590	C – 8
93310–420F2	C – 8
93310–635D4	B – 5
93311–42077	C – 8
93315–21813	C – 6
93316–00801	D – 9
93316–01003	B – 15
93316–013Y0	D – 5
93317–855Y9	D – 5

PART NO.	GRID NO.
93399–99926	D – 7
93410–20038	C – 8
93410–22039	D – 7
93410–46079	C – 6
93430–10015	E – 9
93440–12052	B – 2
93440–20088	D – 7
93440–25084	C – 8
93450–22027	B – 5
93450–22119	D – 15
93450–24062	C – 6
93450–44141	D – 9
93450–71142	D – 9
93503–08007	C – 11
93603–07073	B – 10
93603–12030	B – 10
93604–10011	B – 7
93900–00813	D – 15
	E – 5
94108–12806	D – 15
94110–12803	E – 5
94582–20116	B – 7
94591–54038	C – 8
94701–00333	B – 3
95022–06008	F – 7
95022–06012	B – 2
	B – 8
	C – 2
95022–06014	C – 4
	C – 11
95022–06016	C – 11
95022–06025	B – 7
	C – 3
95022–06030	C – 3
	E – 14
95022–06035	C – 4
95022–06040	B – 15
	C – 3
95022–06050	B – 8
95022–06060	B – 8
95022–06065	B – 15
95302–05600	F – 9
95302–06600	F – 3
	F – 4
95302–08700	C – 12
95307–05700	E – 7
95602–10200	C – 13
95602–12200	D – 4

PART NO.	GRID NO.
95606–06100	E – 8
95607–05100	E – 7
95607–06100	F – 5
95617–08620	B – 2
95702–05300	E – 9
95702–10500	D – 4
	D – 7
95802–06012	D – 11
95802–06020	F – 6
95802–06025	B – 9
	E – 8
95802–08012	D – 4
95812–06010	C – 14
95812–06014	B – 9
95812–06016	B – 14
	C – 12
95812–06035	C – 12
95812–08012	C – 13
	E – 9
	E – 12
95812–08025	C – 14
	E – 10
95812–08030	D – 12
95812–10020	D – 4
95812–10025	D – 5
95812–10080	C – 13
95812–10110	C – 13
9581P–06008	B – 14
95822–06012	B – 15
	E – 3
	E – 8
	E – 11
95822–06035	C – 3
95822–06045	C – 3
95822–08020	C – 14
95822–10040	B – 14
97002–06012	B – 2
97002–06020	F – 6
97012–06016	C – 2
97022–06016	B – 7
97022–08025	D – 5
97022–08030	C – 10
97022–08060	D – 12
97080–06020	C – 12
97607–04210	E – 7
97607–06120	F – 5
97702–40620	F – 3
	F – 4

PART NO.	GRID NO.
97702–60420	F – 6
98501–04014	B – 13
98502–05020	E – 7
98507–03008	D – 13
98507–04008	B – 13
98507–04014	B – 13
98507–05020	E – 7
98507–05030	F – 5
9850L–04006	B – 13
98517–05012	F – 5
98580–04010	B – 12
98702–04018	D – 13
98702–06020	B – 10
	B – 15
98702–06030	B – 10
98706–04012	E – 8
99009–10400	B – 8
99009–11400	B – 10
99009–12400	C – 5
99009–32400	D – 11
	D – 15
99009–55500	E – 5
99009–80500	B – 15
99530–10114	B – 15
	C – 3
99530–14016	B – 2
	B – 4

PART NO.	GRID NO.